Specification

Ignition System

Items			Specification
Ignition coil	Primary resistance		0.62 ± 10 % (Ω)
	Secondary resistance		7.0 ± 15 % (kΩ)
Spark plugs	Unleaded	Type	FK16HQR11
		Gap	1.0 ~ 1.1 mm (0.0394 ~ 0.0433 in.)

Starting System

Items			Specification
Starter	Rated voltage		12V, 1.2kW
	No. of pinion teeth		11
	No-load characteristics	Voltage	11.5V
		Ampere	90A, MAX
		Speed	2,600rpm, MIN

Charging System

Items		Specification	
		2.0	2.4
Alternator	Type	Battery voltage sensing	
	Rate voltage	13.5 V, 110A	
	Speed in use	1,000 ~ 18,000 rpm	
	Voltage regulator	IC regulator built-in type	
	Regulator setting voltage	14.4 ± 0.1V	
	Temperature compensation	-3.5 ± 1mV / °C	
Battery	Type	48-23GL	54-26GL
	Cold cranking amperage [at -18°C (-0.4°F)]	550A	600A
	Reserve capacity	92min	110min
	Specific gravity [at 25°C (77°F)]	1.280 ± 0.01	

CAUTION

- COLD CRANKING AMPERAGE is the amperage a battery can deliver for 30 seconds and maintain a terminal voltage of 7.2V or greater at a specified temperature.
- RESERVE CAPACITY RATING is amount of time a battery can deliver 25A and maintain a minimum terminal voltage of 10.5V at 26.7°C(80.1°F).

NOTE

mcx30.com

- Battery type notation: ① ② - ③ ④

① : 5HR capacity
② : Battery length (A)
③ : Battery width (B)
④ : Terminal location (C)

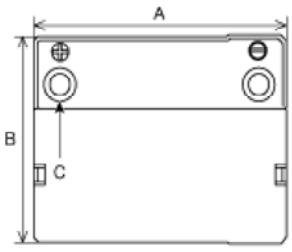

Engine Electrical System > General Information > Troubleshooting

Trouble Shooting

Ignition System

Symptom	Suspect area	Remedy
Engine will not start or is hard to start (Cranks OK)	Ignition lock switch	Inspect ignition lock switch, or replace as required
	Ignition coil	Inspect ignition coil, or replace as required
	Spark plugs	Inspect spark plugs, or replace as required
	Ignition wiring disconnected or broken	Repair wiring, or replace as required
Rough idle or stalls	Ignition wiring	Repair wiring, or replace as required
	Ignition coil	Inspect ignition coil, or replace as required
Engine hesitates/poor acceleration	Spark plugs and spark plug cables	Inspect spark plugs / cable, or replace as required
	Ignition wiring	Repair wiring, or replace as required
Poor mileage	Spark plugs and spark plug cables	Inspect spark plugs / cable, or replace as required

Charging System

Symptom	Suspect area	Remedy
Charging warning indicator does not light with ignition switch "ON" and engine off.	Fuse blown	Check fuses
	Light burned out	Replace light
	Wiring connection loose	Tighten loose connection
	Electronic voltage regulator	Disconnect the voltage regulator to see if light turns off. If light turns off, replace voltage regulator.
Charging warning indicator does not go out with engine running. (Battery requires frequent	Drive belt loose or worn	Adjust belt tension or replace belt
	Battery cable loose, corroded or worn	Inspect cable connection, repair or

mcx30.com

	Electronic voltage regulator or alternator	Disconnect the voltage regulator or alternator to see if light turns off. If light turns off, replace voltage regulator.
	Wiring	Repair or replace wiring
Overcharge	Electronic voltage regulator	Disconnect the voltage regulator to see if light turns off. If light turns off, replace voltage regulator.
	Voltage sensing wire	Repair or replace wiring
Discharge	Drive belt loose or worn	Adjust belt tension or replace belt
	Wiring connection loose or short circuit	Inspect wiring connection, repair or replace wiring
	Electronic voltage regulator or alternator	Disconnect the voltage regulator or alternator to see if light turns off. If light turns off, replace voltage regulator.
	Poor grounding	Inspect ground or repair
	Worn battery	Replace battery

Starting System

Symptom	Suspect area	Remedy
Engine will not crank	Battery charge low	Charge or replace battery
	Battery cables loose, corroded or worn out	Repair or replace cables
	Transaxle range switch (Vehicle with automatic transaxle only)	Refer to AT group-automatic transaxle
	Fuse blown	Replace fuse
	Starter faulty	Replace
	Ignition switch faulty	Replace
Engine cranks slowly	Battery charge low	Charge or replace battery
	Battery cables loose, corroded or worn out	Repair or replace cables
	Starter faulty	Replace
Starter keeps running	Starter	Replace
	Ignition switch	Replace
Starter spins but engine will not crank	Short in wiring	Repair wiring
	Pinion gear teeth broken or Starter	Replace
	Ring gear teeth broken	Replace fly wheel or torque converter

Engine Electrical System > General Information > Special Service Tools

Special Service Tools

Tool (Number and name)	Illustration	Use
Alternator pulley remover wrench (09373-27000)	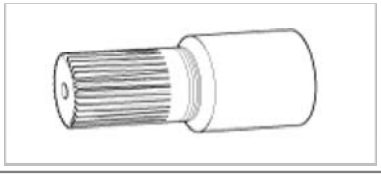	Removal and installation of alternator pulley

mcx30.com

Battery checker	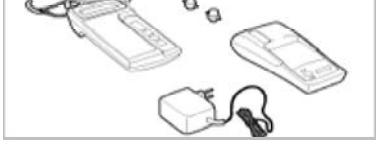	- Check the charging and starting system

Engine Electrical System > General Information > General Information

The Micro 570 Analyzer

The Micro 570 Analyzer provides the ability to test the charging and starting systems, including the battery, starter and alternator.

CAUTION

※ Because of the possibility of personal injury, always use extreme caution and appropriate eye protection when working with batteries.
※ When charging battery by test result, Battery must be fully charged.
To get accurate test result, battery surface voltage must have subsided ahead before test when you test battery after charged. (See following Battery Test Results)

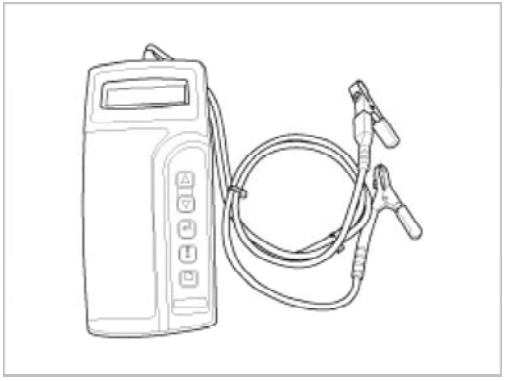

Keypad

The Micro 570 button on the key pad provide the following functions :

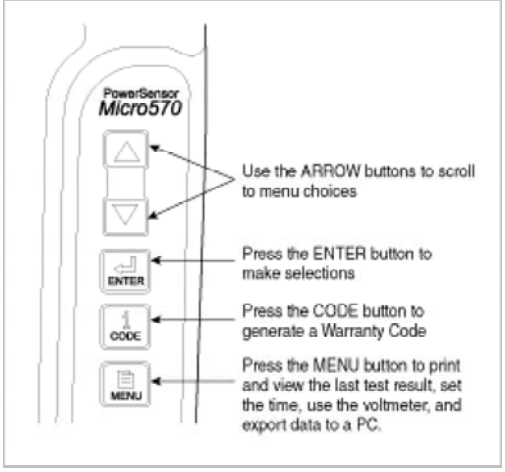

Battery Test Procedure

1. Connect the tester to the battery.
   A. Red clamp to battery positive (+) terminal.
   B. Black clamp to battery negative (-) terminal.

mcx30.com

CAUTION

Connect clamps securely. If "CHECK CONNECTION" message is displayed on the screen, reconnect clamps securely.

2. The tester will ask if the battery is connected "IN-VEHICLE" or "OUT-OF-VEHICLE". Make your selection by pressing the arrow buttons; then press ENTER.

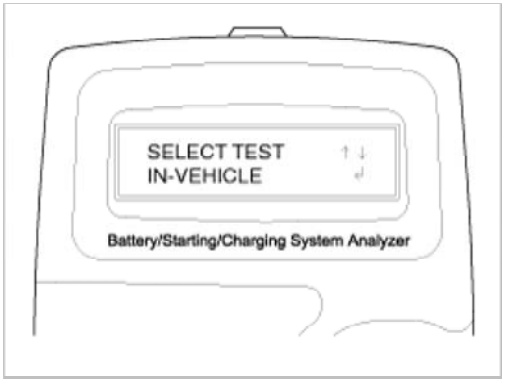

3. Select CCA and press the ENTER button.

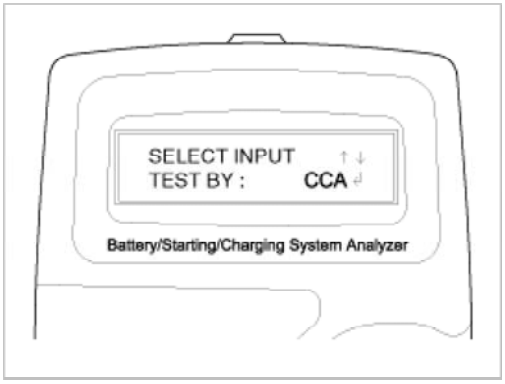

NOTE

CCA : Cold cranking amps, is an SAE specification for cranking batteried at -0.4°F (-18°C).

4. Set the CCA value displayed on the screen to the CCA value marked on the battery label by pressing up and down buttons and press ENTER.

mcx30.com

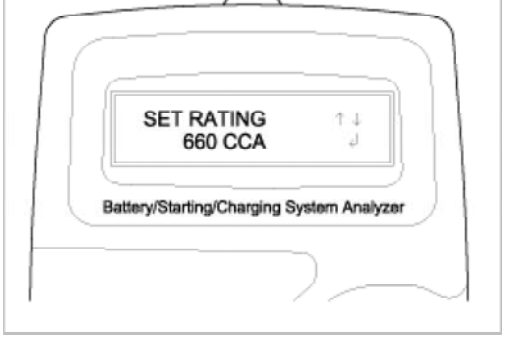

NOTE

The battery ratings(CCA) displayed on the tester must be identical to the ratings marked on battery label.

5. The tester will conduct battery test.

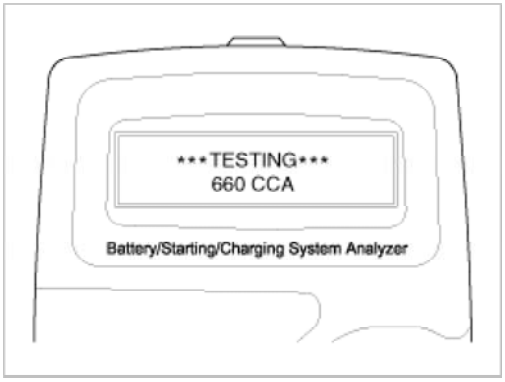

6. The tester displays battery test results including voltage and battery ratings.
   Refer to the following table and take the appropriate action as recommended by the Micro 570.

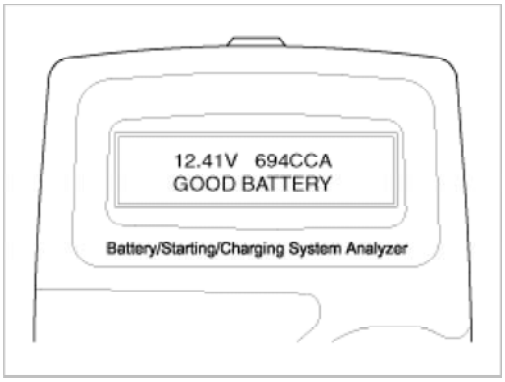

Battery Test Results

Result On Printer	Remedy
GOOD BATTERY	No action is required.
GOOD RECHARGE	Battery is in a good state. Recharge the battery and use. ※ You have to follow instruction below when you charge battery and retest, otherwise test result can be inaccurate. (See ‘Charge and Retest method after battery charge’ below.)
CHARGE & RETEST	Battery is not charged properly. - Charge and test the battery again. ※ You have to follow instruction below when you charge battery and retest, otherwise test result can be inaccurate. (See ‘Charge and Retest method after battery charge’ below.)
REPLACE BATTERY	Replace battery and recheck the charging system. - Improper connection between battery and vehicle cables may cause "REPLACE

mcx30.com

	the battery terminal directly prior to replacing the battery.
BAD CELL-REPLACE	Charge and retest the battery. - If the Micro 570 recommends "REPLACE BATTERY", replace the battery and recheck the charging system.

[Charge and Retest method after battery charge]

Battery charge

Set battery charger to 'Auto Mode' (The Mode that charging current drops as the battery charges.) and charge battery until charging current down close to zero or the charger alerts you with an alarm when charge is complete.
(Minimum charging time recommended: More than 3 hours with Auto Mode that explained above)

A. If battery is not fully charged, battery surface voltage will be high while the amount of current charged (CCA) in battery is low. If you measure the battery under this condition, tester may misjudge that battery sulfation occurred because the amount of current in battery is too low in comparison with battery voltage.
   * Surface voltage: When battery is charged electrolyte temperature increases and chemical reaction become active resulting in an excessive increase of battery voltage.
   It is known that it takes approximate one day to subside this increased surface voltage completely.

Battery Test after charge

Do not test battery right after the charge. Test battery after battery surface voltage has subsided as instructed in the following procedure.

(1) When battery charge is complete, install the battery in the vehicle.

(2) Put IG key to ON position and turn on head lamp with low beam, and wait 5 minutes. (Discharge for 5 minutes)

(3) Turn off the head lamp and IG key, and wait 5 minutes. (Waiting for 5 minutes)

(4) Remove +, - cable from the battery and test battery.

> WARNING
>
> Whenever filing a claim for battery, the print out of the battery test results must be attached.

Starter Test Procedure

7. After the battery test, press ENTER immediately for the starter test.

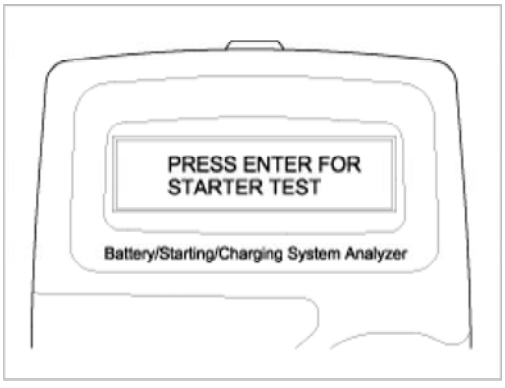

8. Start the engine.

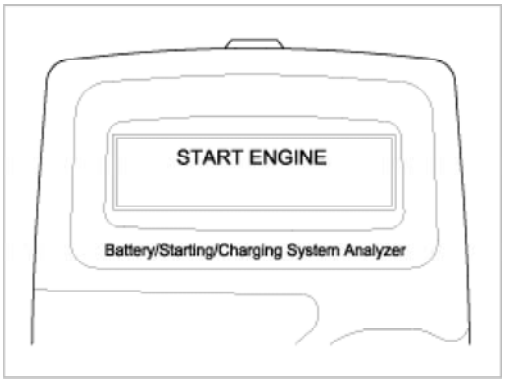

9. Cranking voltage and starter test results will be displayed on the screen.
   Refer to the following table and take the appropriate action as recommended by the Micro 570.

mcx30.com

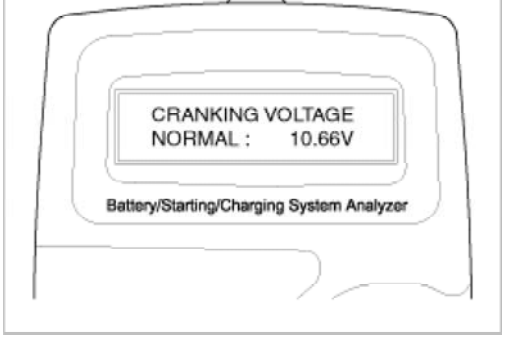

Starter Test Results

Result On Printer	Remedy
CRANKING VOLTAGE NORMAL	System shows a normal starter draw.
CRANKING VOLTAGE LOW	Cranking voltage is lower than normal level. - Check starter.
CHARGE BATTERY	The state of battery charge is too low to test. - Charge the battery and retest.
REPLACE BATTERY	Replace battery. - If the vehicle is not started though the battery condition of "GOOD BATTERY" is displayed, check wiring for open circuit, battery cable connection, starter and repair or replace as necessary. - If the engine does crank, check fuel system.

NOTE

When testing the vehicle with old diesel engines, the test result will not be favorable if the glow plug is not heated. Conduct the test after warming up the engine for 5 minutes.

Charging System Test Procedure

10. Press ENTER to begin charging system test.

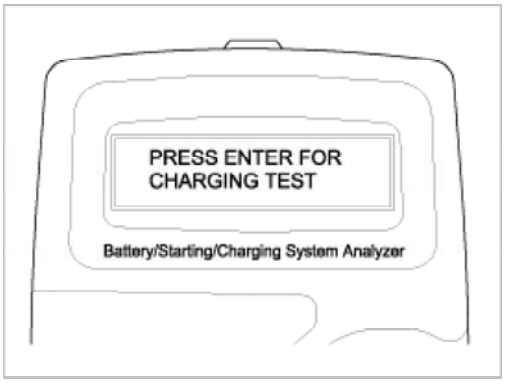

11. The tester displays the actual voltage of alternator.
    Press ENTER to continue.

mcx30.com

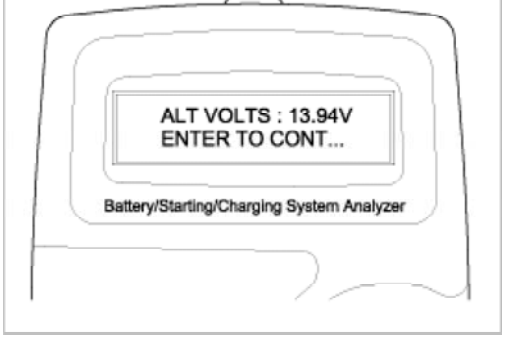

12. Turn off all electrical load and rev engine for 5 seconds with pressing the accelerator pedal. (Follow the instructions on the screen)

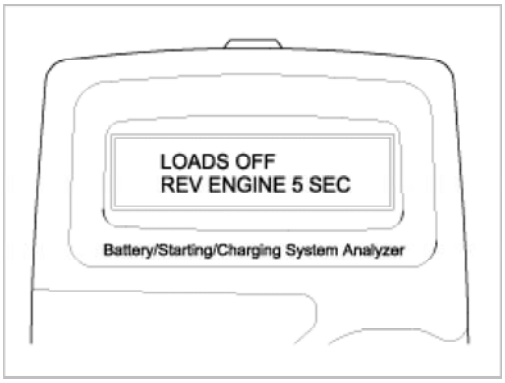

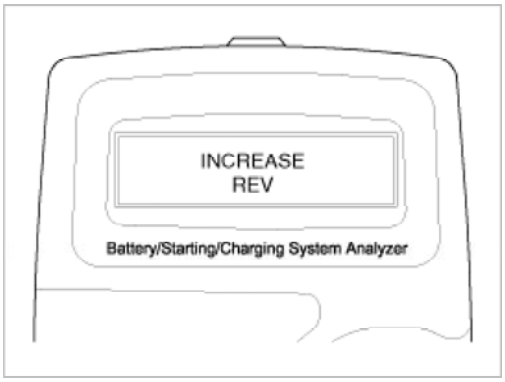

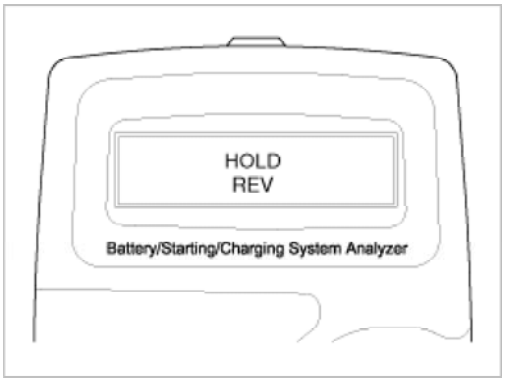

13. The message that engine RPM is detected will be displayed on the screen. Press ENTER to continue.

mcx30.com

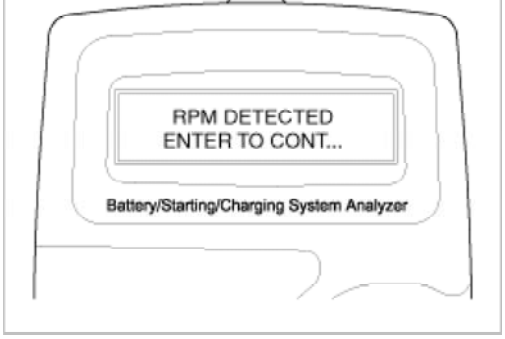

14. If the engine RPM is not detected, press ENTER after revving engine.

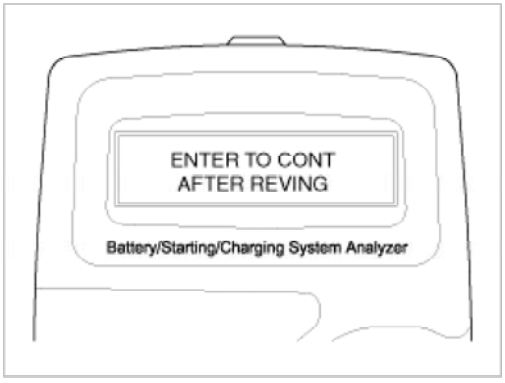

15. The tester will conduct charging system test during loads off.

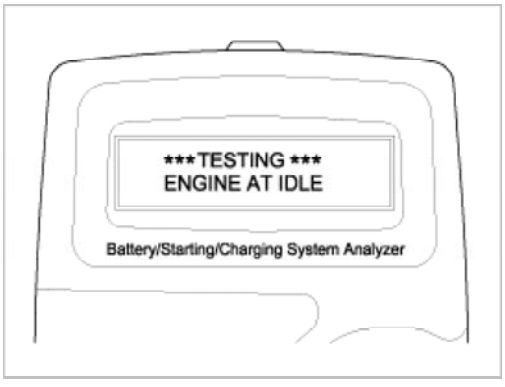

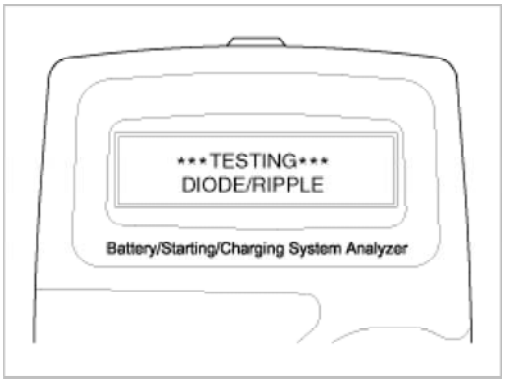

16. Turn on electrical loads (air conditioner, lamps, audio and etc). Press ENTER to continue.

mcx30.com

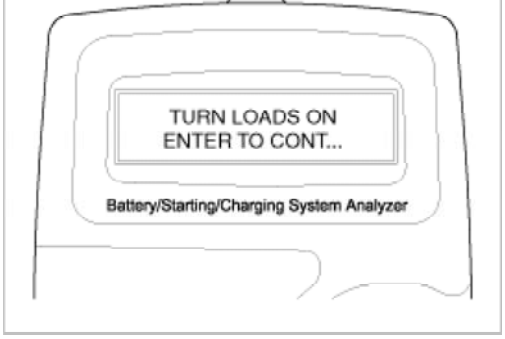

17. The tester will conduct charging system test during loads on.

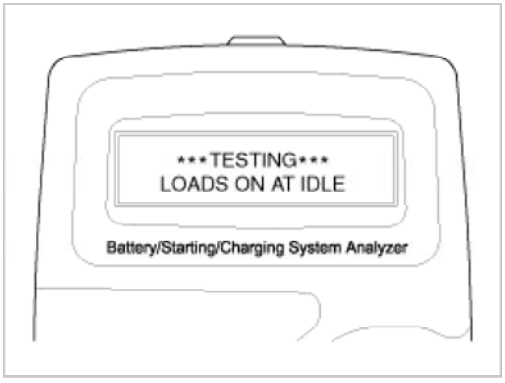

18. Rev engine for 5 seconds with pressing the accelerator pedal. (Follow the instructions on the screen)

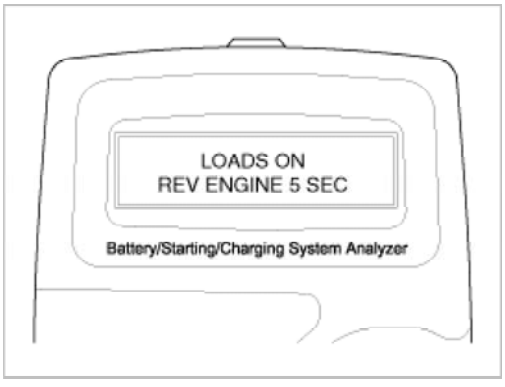

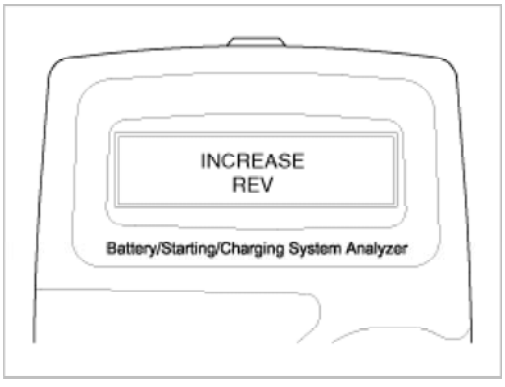

mcx30.com

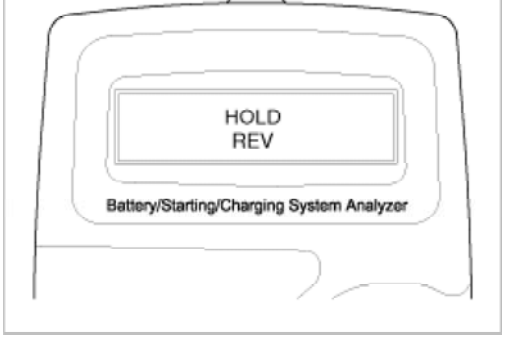

19. The message that engine RPM is detected will be displayed on the screen. Press ENTER to continue.

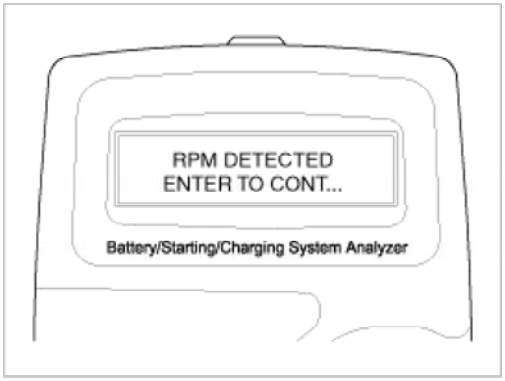

20. If the engine RPM is not detected, press ENTER after revving engine.

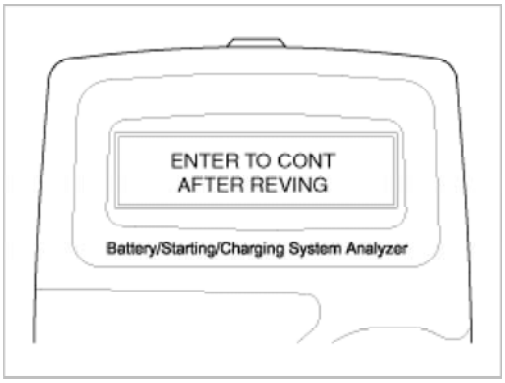

21. Turn off electrical loads (air conditioner, lamps, audio and etc). Turn the engine off.

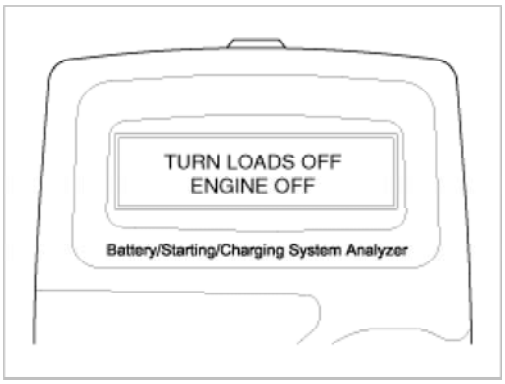

22. Charging voltage and charging system test results will be displayed on the screen.
    Shut off engine end disconnect the tester clamps from the battery. Refer to the following table and take the appropriate action as recommended by the Micro 570.

mcx30.com

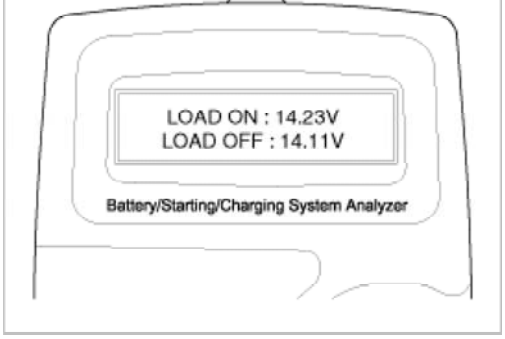

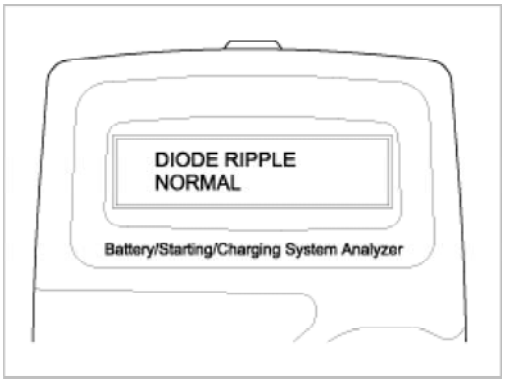

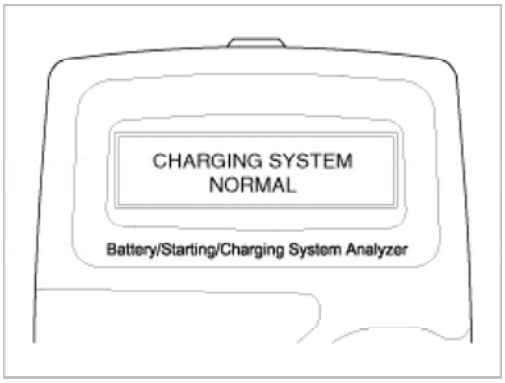

Charging System Test Results

Result On Printer	Remedy
CHARGING SYSTEM NORMAL / DIODE RIPPLE NORMAL	Charging system is normal.
NO CHARGING VOLTAGE	Alternator does not supply charging current to battery. - Check belts, connection between alternator and battery and replace belts or cable or alternator as necessary.
LOW CHARGING VOLTAGE	Alternator does not supply charging current to battery and electrical load to system fully. - Check belts and alternator and replace as necessary.
HIGH CHARGING VOLTAGE	The voltage from alternator to battery is higher than normal limit during voltage regulating. - Check connection and ground and replace regulator as necessary. - Check electrolyte level in the battery.
EXCESS RIPPLE DETECTED	One or more diodes in the alternator is not functioning properly. - Check alternator mounting and belts and replace as necessary.

Engine Electrical System > Ignition System > Description and Operation

mcx30.com

Ignition timing is controlled by the electronic control ignition timing system. The standard reference ignition timing data for the engine operating conditions are preprogrammed in the memory of the ECM (Engine Control Module).
The engine operating conditions (speed, load, warm-up condition, etc.) are detected by the various sensors. Based on these sensor signals and the ignition timing data, signals to interrupt the primary current are sent to the ECM. The ignition coil is activated, and timing is controlled.

Engine Electrical System > Ignition System > Repair procedures

On-vehicle Inspection

Spark Test

1. Disconnect the ignition coil connectors (A).

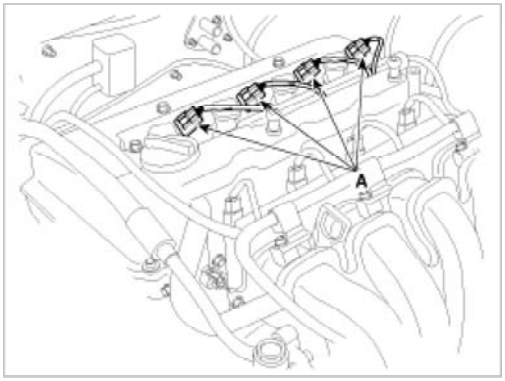

2. Remove the ignition coils (A).

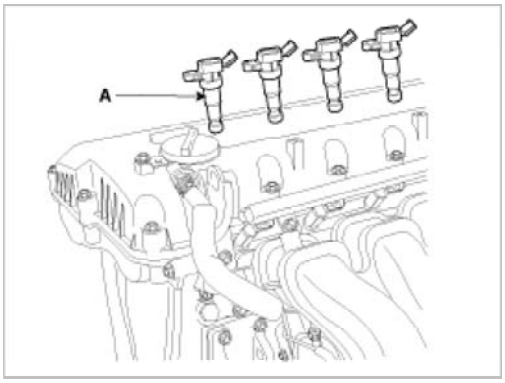

3. Using a spark plug socket, remove the spark plug.
4. Install the spark plug to the ignition coil.
5. Ground the spark plug to the engine.

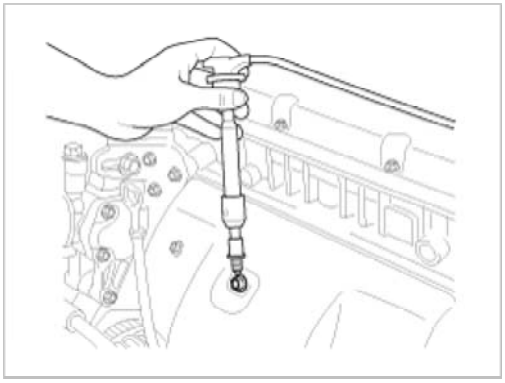

6. Check if spark occurs while engine is being cranked.

> NOTE
>
> To prevent fuel being injected from injectors while the engine is being cranked, disconnect the injector connector.

mcx30.com

7. Inspect all the spark plugs.
8. Using a spark plug socket, install the spark plug.
9. Install the ignition coil.
10. Reconnect the ignition coil connector.

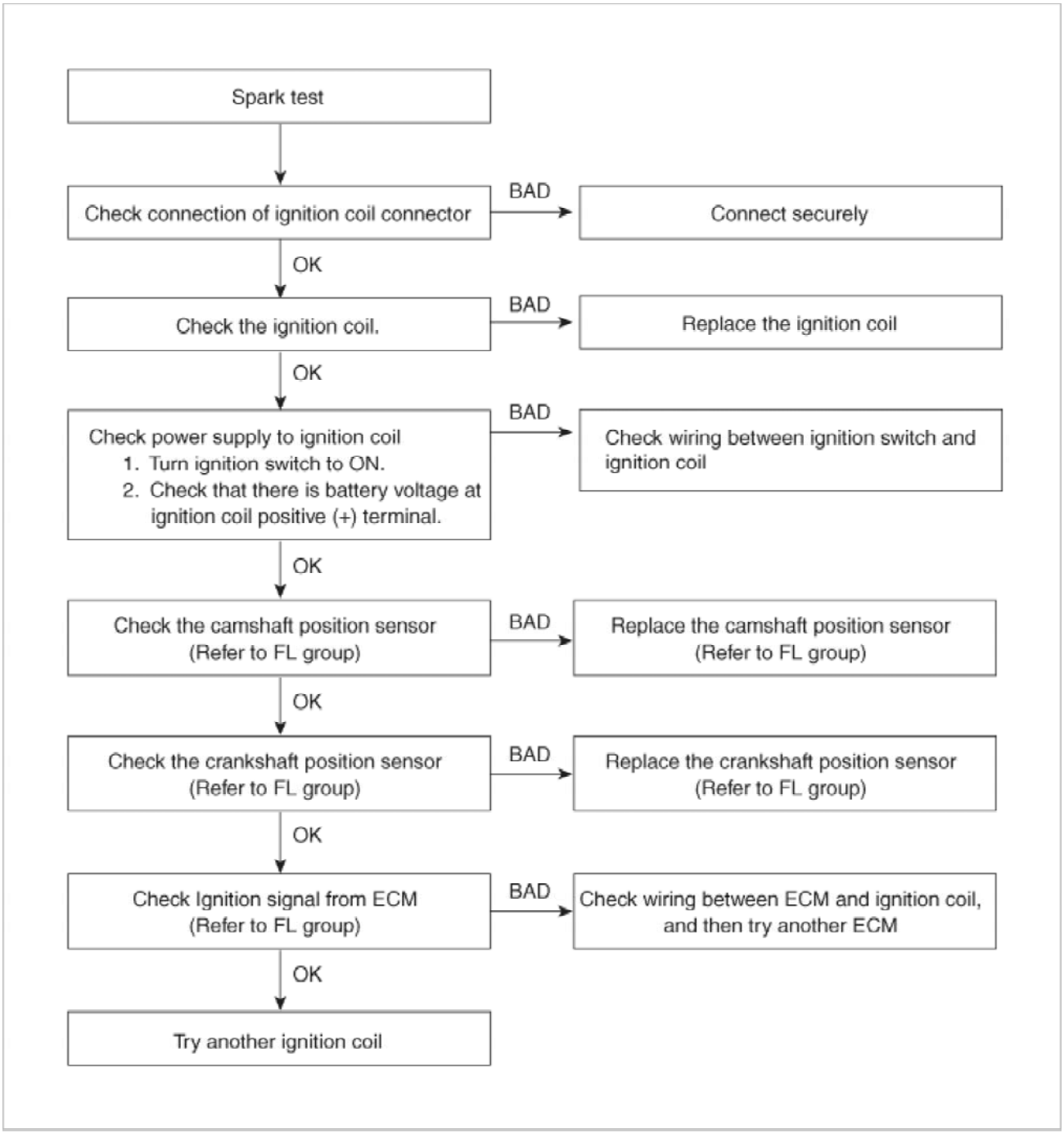

Inspect Spark Plug

1. Disconnect the ignition connectors (A).

mcx30.com

2. Remove the ignition coils (A).

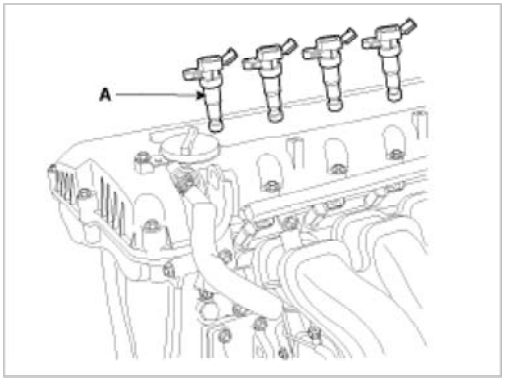

3. Using a spark plug socket, remove the spark plug.

> CAUTION
>
> Be careful that no contaminates enter through the spark plug holes.

4. Inspect the electrodes (A) and ceramic insulator (B).

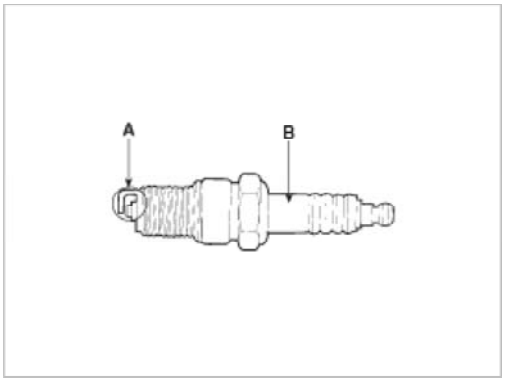

Inspection Of Electrodes

Condition	Dark deposits	White deposits
Description	- Fuel mixture too rich - Low air intake	- Fuel mixture too lean - Advanced ignition timing - Insufficient plug tightening torque

5. Check the electrode gap (A).

Standard
Unleaded : 1.0 ~ 1.1 mm (0.0394 ~ 0.0433 in.)

mcx30.com

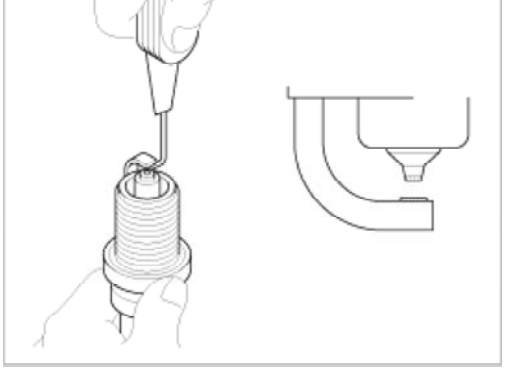

Inspect Ignition Coil

1. Measure the primary coil resistance between terminals (+) and (-).

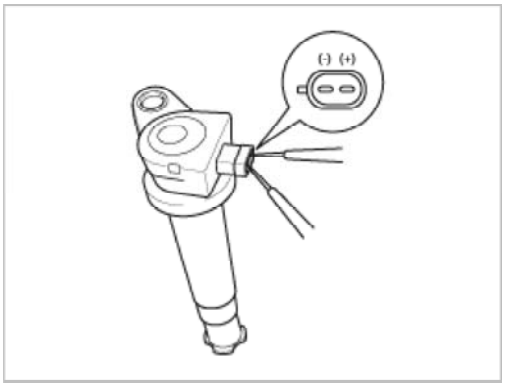

Standard value: 0.62Ω ± 10%

Engine Electrical System > Charging System > Description and Operation

Description

The charging system includes a battery, an alternator with a built-in regulator, and the charging indicator light and wire.
The Alternator has built-in diodes, each rectifying AC current to DC current.
DC current appears at alternator "B" terminal.
The charging voltage of this alternator is regulated by the ECM.
The main components of the alternator are the rotor, stator, rectifier, capacitor brushes, bearings and V-ribbed belt pulley.
The brush holder contains a built-in electronic voltage regulator.

Alternator Management System

Alternator management system controls the charging voltage set point in order to improve fuel economy, manage alternator load under various operating conditions, keep the battery charged, and protect the battery from over-charging.
Battery sensor is mounted on battery (-) terminal. It transmits battery voltage, current, temperature information to ECM.
ECM controls generating voltage by duty cycle based on the signals from battery sensor and vehicle operating conditions.
The system conducts discharging control when accelerating a vehicle. Vehicle reduces an alternator load and consumes an electric power from a battery.
The system conducts charging control when decelerating a vehicle. Vehicle increases an alternator load and charges a battery.

Engine Electrical System > Charging System > Repair procedures

On-vehicle Inspection

CAUTION

- Check that the battery cables are connected to the correct terminals.
- Disconnect the battery cables when the battery is given a quick charge.

mcx30.com

Check The Battery Terminals And Fuses

1. Check that the battery terminals are not loose or corroded.
2. Check the fuses for continuity.

Inspect Drive Belt

Visually check the belt for excessive wear, frayed cords etc.
If any defect has been found, replace the drive belt.

> NOTE
>
> Cracks on the rib side of a belt are considered acceptable. If the belt has chunks missing from the ribs, it should be replaced.

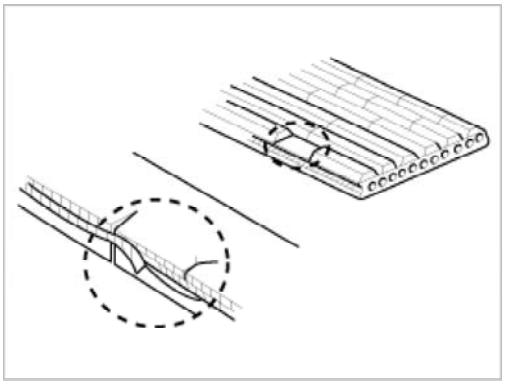

Visually Check Alternator Wiring And Listen For Abnormal Noises

1. Check that the wiring is in good condition.
2. Check that there is no abnormal noise from the alternator while the engine is running.

Check Discharge Warning Light Circuit

1. Warm up the engine and then turn it off.
2. Turn off all accessories.
3. Turn the ignition switch "ON". Check that the discharge warning light is lit.
4. Start the engine and Check that the light goes off.
   If the light does not go off as specified, troubleshoot the discharge light circuit.

Engine Electrical System > Charging System > Alternator > Components and Components Location

Component

mcx30.com

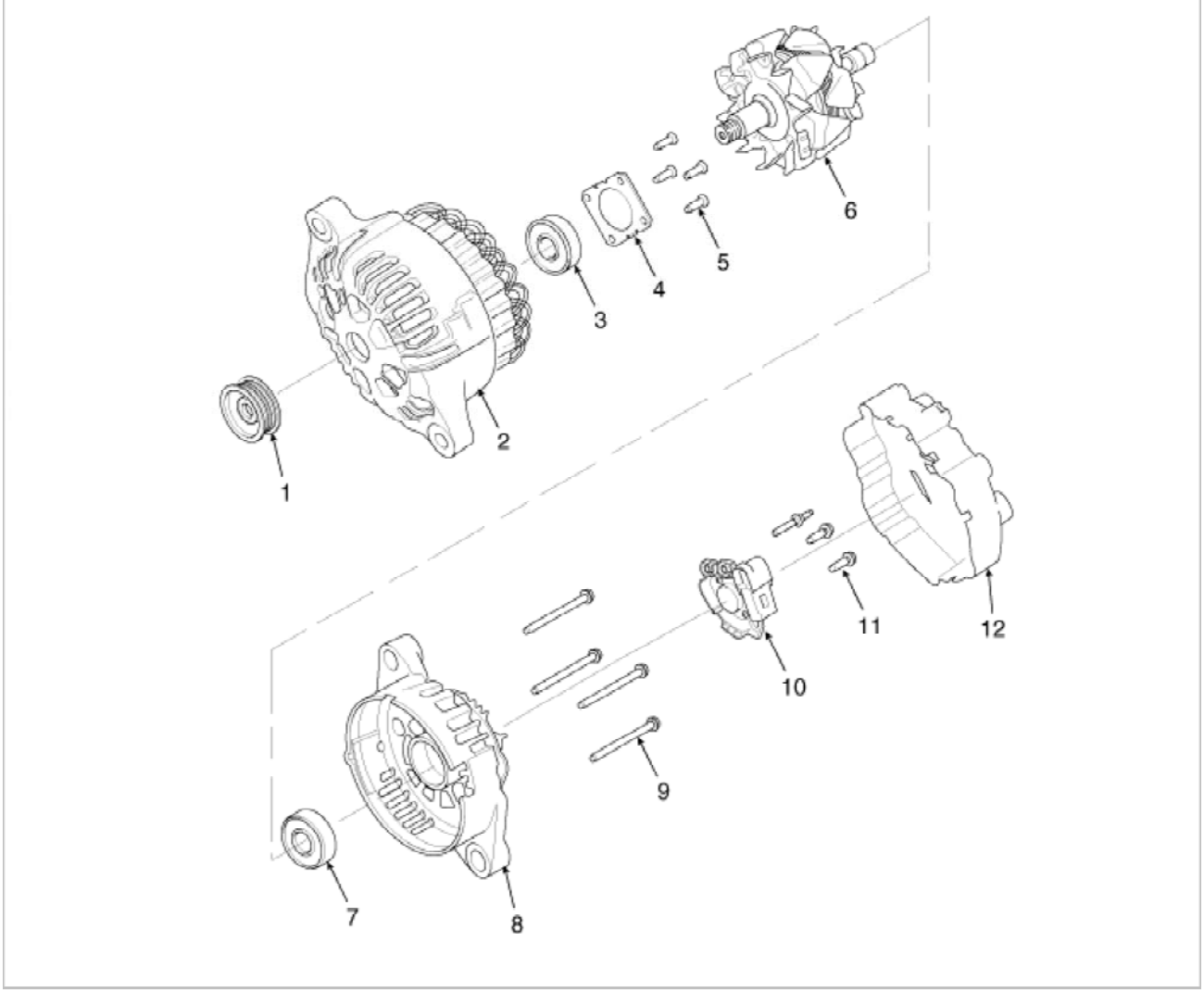

1. Pulley	7. Rear bearing
2. Front housing	8. Rear housing
3. Front bearing	9. Through bolt
4. Bearing cover	10. Brush holder assembly
5. Bearing cover bolt	11. Brush holder bolt
6. Rotor	12. Rear cover

Engine Electrical System > Charging System > Alternator > Repair procedures

Disassembly

1. Remove the alternator cover (A) using a screw driver (B).

mcx30.com

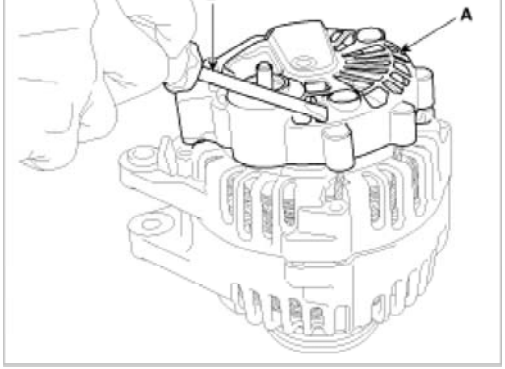

2. Loosen the mounting bolts (A) and disconnect the brush holder assembly (B).

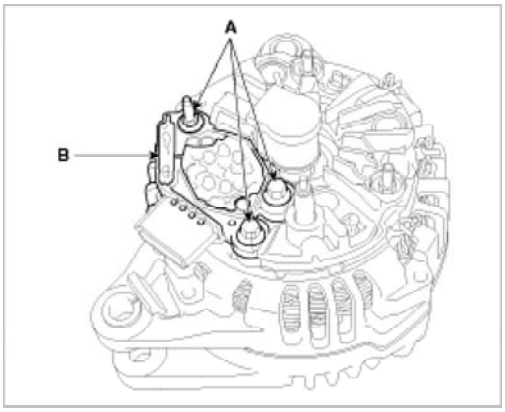

3. Remove the slip ring guide (A).

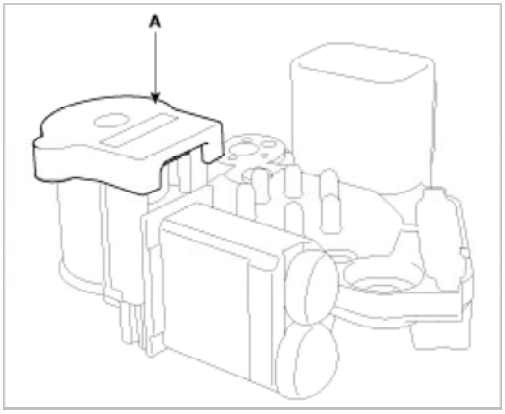

4. Use the SST (09373-27000) remove the pulley (A).

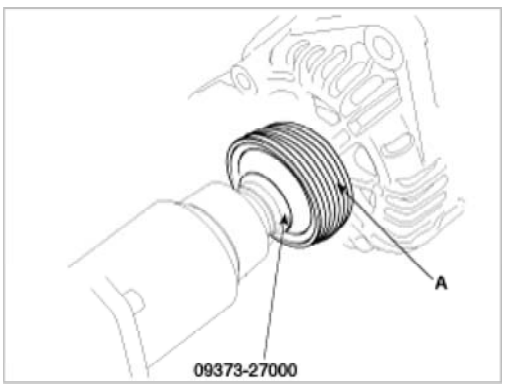

5. Loosen the 4 through bolts (A).

mcx30.com

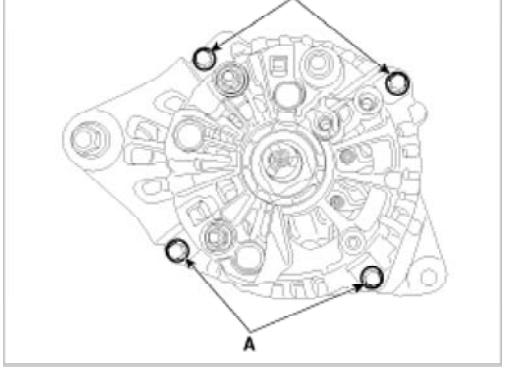

6. Disconnect the rotor (A) and housing (B).

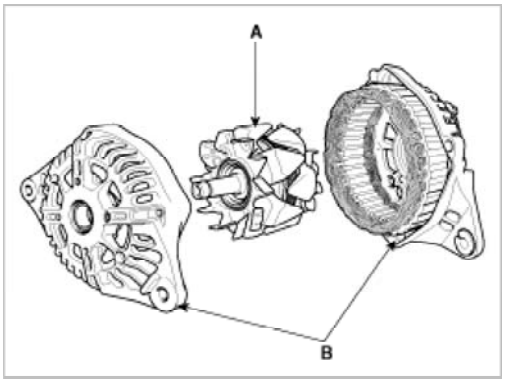

7. Reassembly is the reverse order of disassembly.

Inspection

Inspect Rotor

1. Check that there is continuity between the slip rings (C).

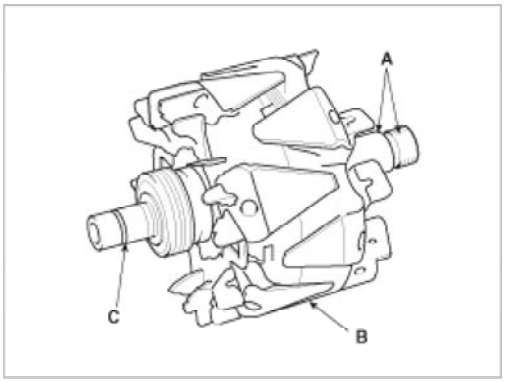

2. Check that there is no continuity between the slip rings and the rotor (B) or rotor shaft (A).
3. If the rotor fails either continuity check, replace the alternator.

Inspect Stator

1. Check that there is continuity between each pair of leads (A).

mcx30.com

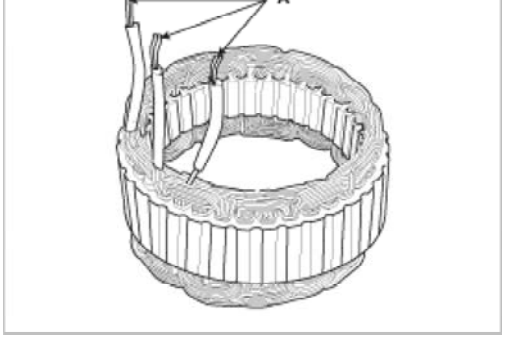

2. Check that there is no continuity between each lead and the coil core.
3. If the coil fails either continuity check, replace the alternator.

Engine Electrical System > Charging System > Battery > Description and Operation

Description

1. The maintenance-free battery is, as the name implies, totally maintenance free and has no removable battery cell caps.
2. Water never needs to be added to the maintenance-free battery.
3. The battery is completely sealed, except for small vent holes in the cover.

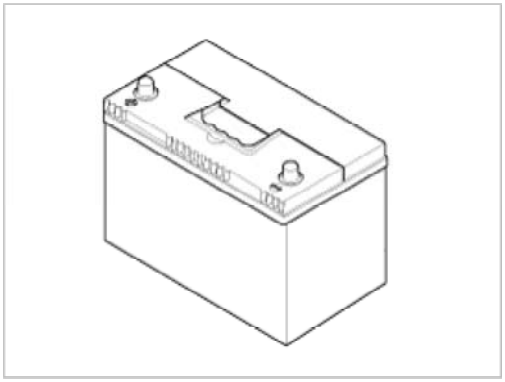

NOTE

After disconnecting then reconnecting the batterynegative cable, reset some parts that require thereset procedures. (Refer to BE group . GeneralInformation)

Engine Electrical System > Charging System > Battery > Components and Components Location

Components

mcx30.com

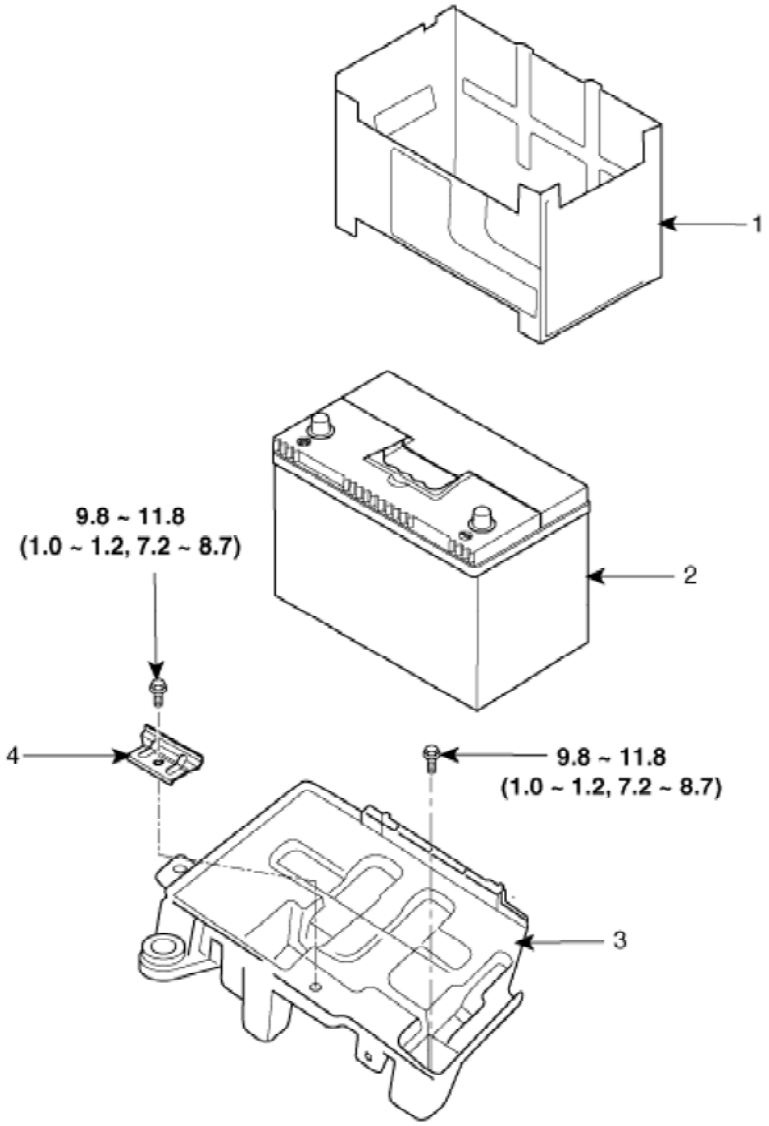

Torque : N.m (kgf.m, lb-ft)

1. Battery insulation pad 2. Battery	3. Battery tray 4. Battery mounting bracket

Engine Electrical System > Charging System > Battery > Repair procedures

Removal and Installation

1. Disconnect the terminals (A) from the battery.
   Disconnect negative battery terminal first.

   Tightening torque:
   (-) terminal : 4.0 ~ 6.0N.m (0.4 ~ 0.6kgf.m, 3.0 ~ 4.4lb-ft)
   (+) terminal : 7.8 ~ 11.8N.m (0.8 ~ 1.2kgf.m, 5.8 ~ 8.7lb-ft)

2. Remove the battery insulation pad (B).
3. Remove the battery mounting bracket by loosening the mounting bolt and then remove the battery (C).

   Tightening torque :
   9.8 ~ 11.8N.m (1.0 ~ 1.2kgf.m, 7.2 ~ 8.7lb-ft)

mcx30.com

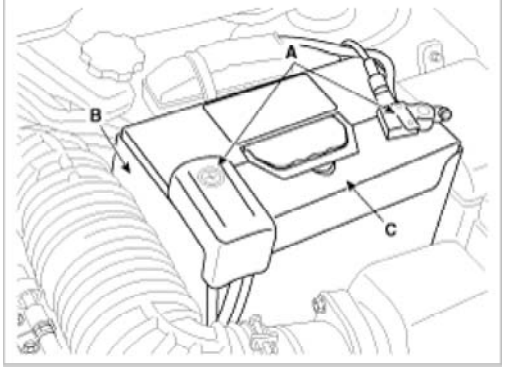

4. Remove the battery tray (A).

Tightening torque :
9.8 ~ 11.8N.m (1.0 ~ 1.2kgf.m, 7.2 ~ 8.7lb-ft)

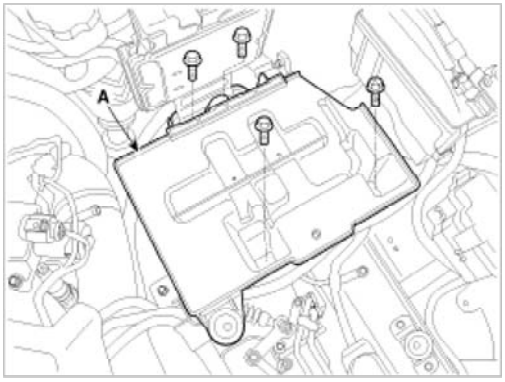

5. Installation is the reverse order of removal.
   Reconnecting the negative battery terminal last.

> CAUTION
>
> When installing the battery, fix the mounting bracket on the tray correctly.

Inspection

Battery Diagnostic Flow

mcx30.com

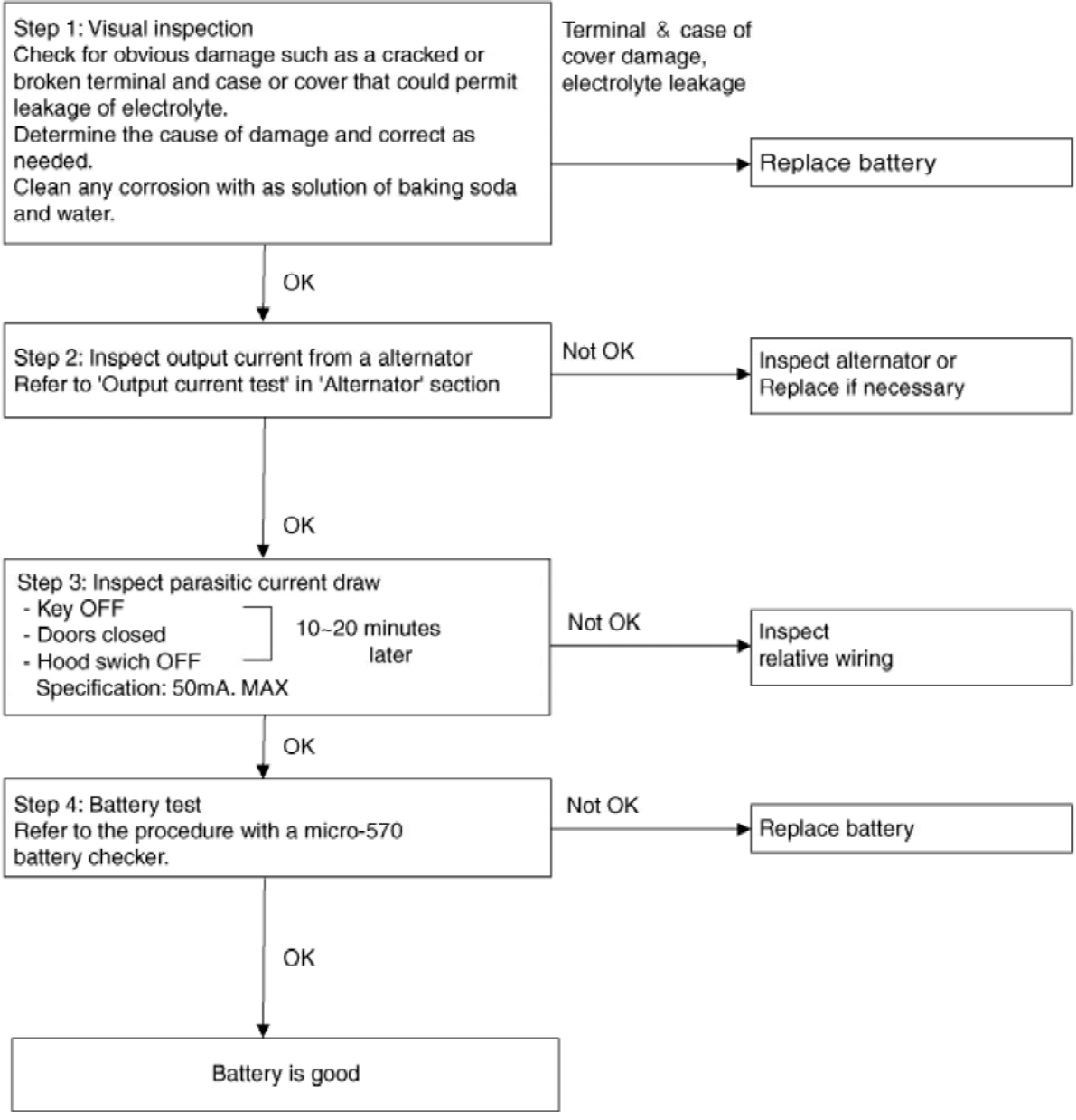

mcx30.com

Vehicle parasitic current inspection

1. Turn the all electric devices OFF, and then turn the ignition switch OFF.
2. Close all doors except the engine hood, and then lock all doors.
   (1) Disconnect the hood switch connector.
   (2) Close the trunk lid.
   (3) Close the doors.
3. Wait a few minutes until the vehicle's electrical systems go to sleep mode.

> **NOTE**
>
> For an accurate measurement of a vehicle parasitic current, all electrical systems should go to sleep mode. (It takes at least one hour or at most one day.) However, an approximate vehicle parasitic current can be measured after 10~20 minutes.

4. Connect an ammeter in series between the battery (-) terminal and the ground cable, and then disconnect the clamp

CAUTION

Be careful that the lead wires of an ammeter do not come off from the battery (-) terminal and the ground cable to prevent the battery from being reset. In case the battery is reset, connect the battery cable again, and then start the engine or turn the ignition switch ON for more than 10 sec. Repeat the procedure from No. 1.
To prevent the battery from being reset during the inspection,

1) Connect a jump cable between the battery (-) terminal and the ground cable.
2) Disconnect the ground cable from the battery (-) terminal.
3) Connect an ammeter between the battery (-) terminal and the ground cable.
4) After disconnecting the jump cable, read the current value of the ammeter.

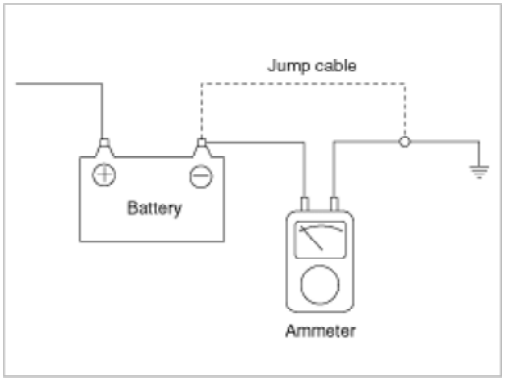

5. Read the current value of the ammeter.
   A. If the parasitic current is over the limit value, search for abnormal circuit by removing a fuse one by one and checking the parasitic current.
   B. Reconnect the suspected parasitic current draw circuit fuse only and search for suspected unit by removing a component connected with the circuit one by one until the parasitic draw drops below limit value.

Limit value (after 10~20 min.) : Below 50mA

Cleaning

1. Make sure the ignition switch and all accessories are in the OFF position.
2. Disconnect the battery cables (negative first).
3. Remove the battery from the vehicle.

CAUTION

Care should be taken in the event the battery case is cracked or leaking, to protect your skin from the electrolyte. Heavy rubber gloves (not the household type) should be wore when removing the battery.

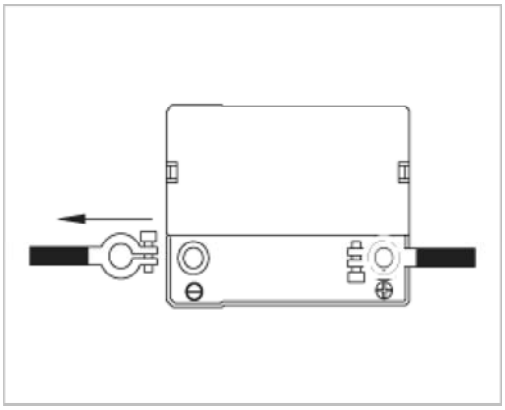

4. Inspect the battery tray for damage caused by the loss of electrolyte. If acid damage is present, it will be necessary to clean the area with a solution of clean warm water and baking soda. Scrub the area with a stiff brush and wipe off with a cloth moistened with baking soda and water.

mcx30.com

6. Inspect the battery case and cover for cracks. If cracks are present, the battery must be replaced.
7. Clean the battery posts with a suitable battery post tool.
8. Clean the inside surface of the terminal clamps with a suitable battery cleaning tool. Replace damaged or frayed cables and broken terminal clamps.
9. Install the battery in the vehicle.
10. Connect the cable terminals to the battery post, making sure tops of the terminals are flush with the tops of the posts.
11. Tighten the terminal nuts securely.
12. Coat all connections with light mineral grease after tightening.

> **CAUTION**
>
> When batteries are being charged, an explosive gas forms beneath the cover of each cell. Do not smoke near batteries being charged or which have recently been charged. Do not break live circuit at the terminals of batteries being charged.
> A spark will occur when the circuit is broken. Keep open flames away from battery.

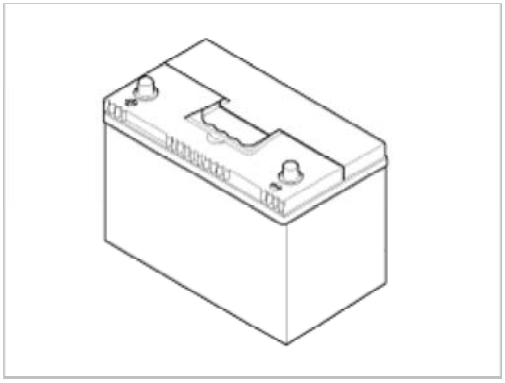

Engine Electrical System > Charging System > Battery Sensor > Description and Operation

Description

Vehicles have many control units that use more electricity. These units control their own system based on information from diverse sensors. It is important to have a stable power supply as there diverse sensors giving a variety of information. Battery sensor is mounted on battery (-) terminal. It transmits battery voltage, current, temperature information to ECM. ECM controls generating voltage by duty cycle based on these signals.

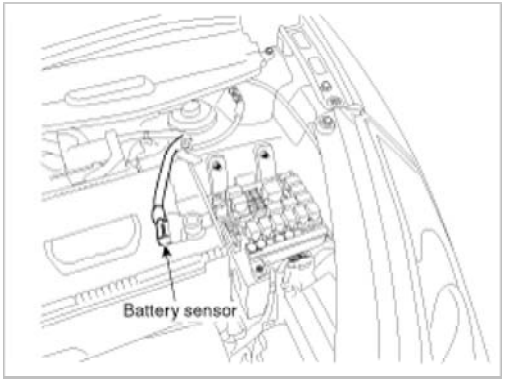

> **CAUTION**
>
> When battery sensor signal fault occurs, inspect the vehicle parasitic draw in advance after inspecting the sensor because the sensor will behave abnormally when the parasitic draw is more than 100mA. (Refer to vehicle parasitic current inspection)

> **NOTE**
>
> Perform the following process after replace the battery sensor.

mcx30.com

- Park the vehicle about 4 hours.
- After 4 hours later, check the SOC (State of charge) of battery using GDS.

CAUTION

For the vehicle equipped with a battery sensor, be careful not to damage the battery sensor when the battery is replaced or recharged.

1. When replacing the battery, it should be same one (type, capacity and brand) that is originally installed on your vehicle. If a battery of a different type is replaced, the battery sensor may recognize the battery to be abnormal.
2. When installing the ground cable on the negative post of battery, tighten the clamp with specified torque of 4.0~6.0N.m (0.4~0.6kgf.m, 3.0~4.4lb-ft). An excessive tightening torque can damage the PCB internal circuit and the battery terminal.
3. When recharging the battery, ground the negative terminal of the booster battery to the vehicle body.

Engine Electrical System > Starting System > Description and Operation

Description

The starting system includes the battery, starter, solenoid switch, ignition switch, inhibitor switch (A/T), clutch pedal switch (M/T), ignition lock switch, connection wires and the battery cable.
When the ignition key is turned to the start position, current flows and energizes the starter motor's solenoid coil.
The solenoid plunger and clutch shift lever are activated, and the clutch pinion engages the ring gear.
The contacts close and the starter motor cranks. In order to prevent damage caused by excessive rotation of the starter armature when the engine starts, the clutch pinion gear overruns.

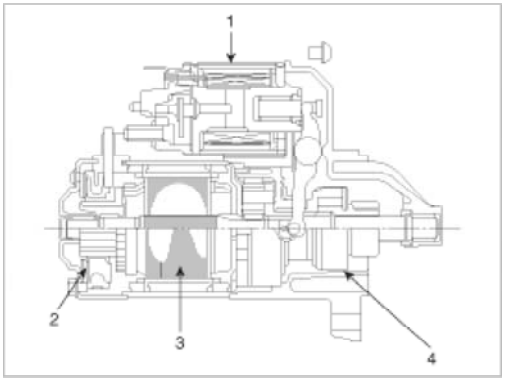

1.Solenoid
2.Brush assembly
3.Armature
4.Overrun clutch

Engine Electrical System > Starting System > Repair procedures

Starter Circuit Troubleshooting

NOTE

The battery must be in good condition and fully charged.

1. Disconnect the injector connectors.
2. With the shift lever in N or P (A/T) or clutch pedal pressed (M/T), turn the ignition switch to "START"
   If the starter normally cranks the engine, starting system is OK. If the starter will not crank the engine at all, go to next step.
   If it won't disengage from the ring gear when you release key, check for the following until you find the cause.
   A. Solenoid plunger and switch malfunction.
   B. Dirty pinion gear or damaged overrunning clutch.

mcx30.com

engine ground cables, and the starter for looseness and corrosion. Then try starting the engine again.
If the starter cranks the engine normally, repairing the loose connection repaired the problem. The starting system is now OK.
If the starter still does not crank the engine, go to next step.

4. Disconnect the connector from the S-terminal of solenoid. Connect a jumper wire from the B-terminal of solenoid to the S-terminal of solenoid.
If the starter cranks the engine, go to next step.
If the starter still does not crank the engine, remove the starter, and repair or replace as necessary.

5. Check the following items in the order listed until you find the open circuit.
   A. Check the wire and connectors between the driver's under-dash fuse/relay box and the ignition switch, and between the driver's under-dash fuse/relay box and the starter.
   B. Check the ignition switch (Refer to BE group - ignition system)
   C. Check the transaxle range switch connector or ignition lock switch connector.
   D. Inspect the starter relay.

Starter Solenoid Test

1. Disconnect the field coil wire from the M-terminal of solenoid switch.
2. Connect the battery as shown. If the starter pinion pops out, it is working properly. To avoid damaging the starter, do not leave the battery connected for more than 10 seconds.

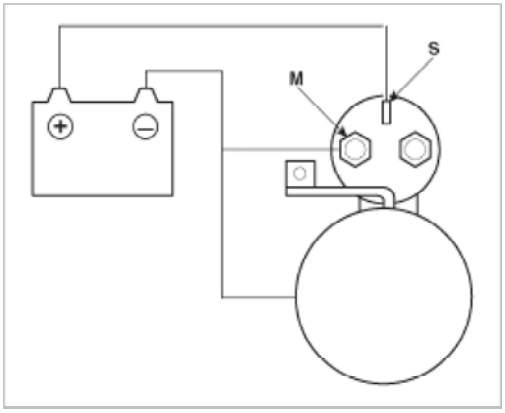

3. Disconnect the battery from the M terminal.
If the pinion does not retract, the hold-in coil is working properly. To avoid damaging the starter, do not leave the battery connected for more than 10 seconds.

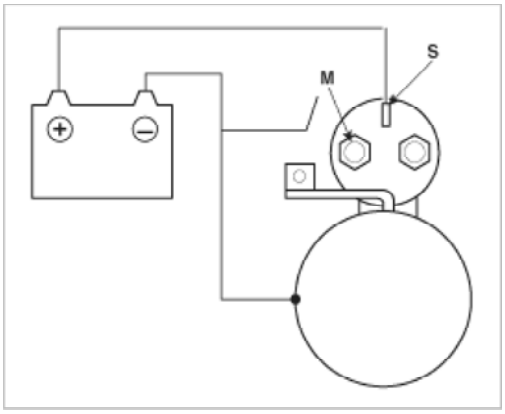

4. Disconnect the battery also from the body. If the pinion retracts immediately, it is working properly. To avoid damaging the starter, do not leave the battery connected for more than 10 seconds.

mcx30.com

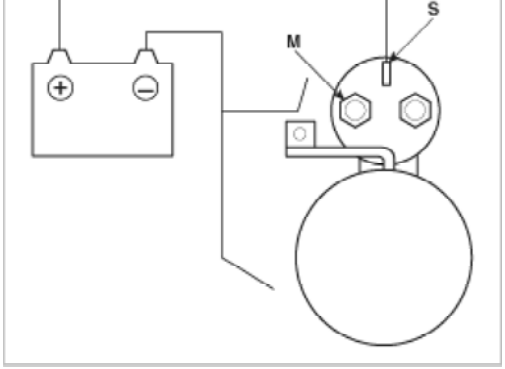

Free Running Test

1. Place the starter motor in a vise equipped with soft jaws and connect a fully-charged 12-volt battery to starter motor as follows.
2. Connect a test ammeter (150-ampere scale) and carbon pile rheostats as shown in the illustration.
3. Connect a voltmeter (15-volt scale) across starter motor.

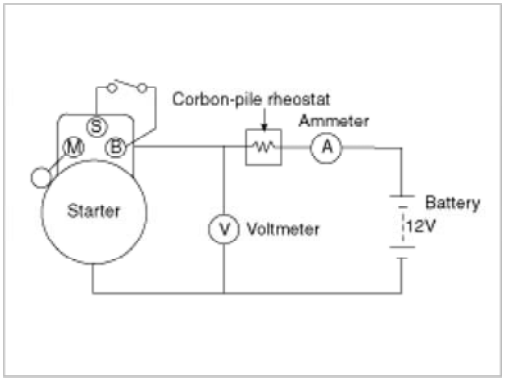

4. Rotate carbon pile to the off position.
5. Connect the battery cable from battery's negative post to the starter motor body.
6. Adjust until battery voltage shown on the voltmeter reads 11.5volts.
7. Confirm that the maximum amperage is within the specifications and that the starter motor turns smoothly and freely.

Current : 90A max
Speed : 2,600 rpm

Engine Electrical System > Starting System > Starter > Components and Components Location

Component

mcx30.com

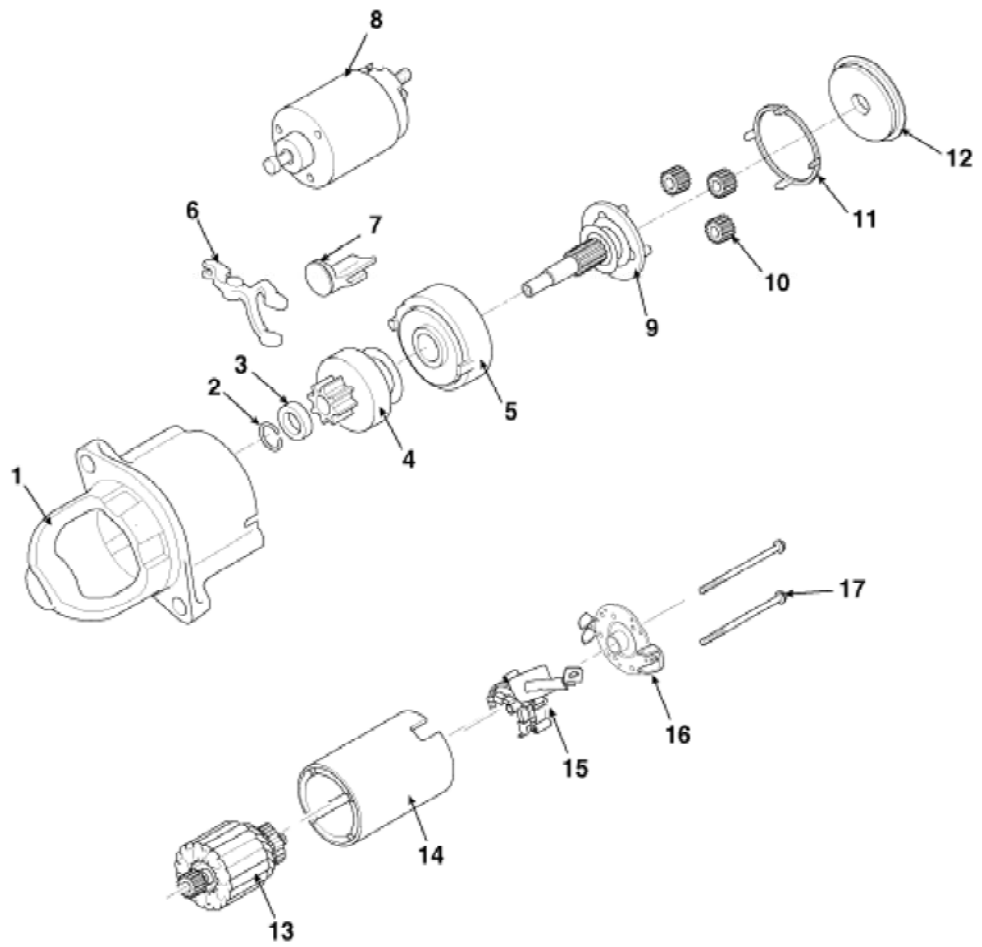

1. Front housing 2. Stop ring 3. Stopper 4. Overrun clutch assembly 5. Internal gear assembly 6. Lever 7. Lever packing 8. Starter solenoid assembly 9. Planet shaft assembly	10. Planetary gear assembly 11. Packing 12. Shield 13. Armature assembly 14. Yoke assembly 15. Brush holder assembly 16. Rear housing 17. Through bolt

Engine Electrical System > Starting System > Starter > Repair procedures

Removal and Installation

Starter

1. Disconnect the battery negative cable.

Tightening torque:
(-) terminal : 4.0 ~ 6.0N.m (0.4 ~ 0.6kgf.m, 3.0 ~ 4.4lb-ft)

mcx30.com

S terminal (E).

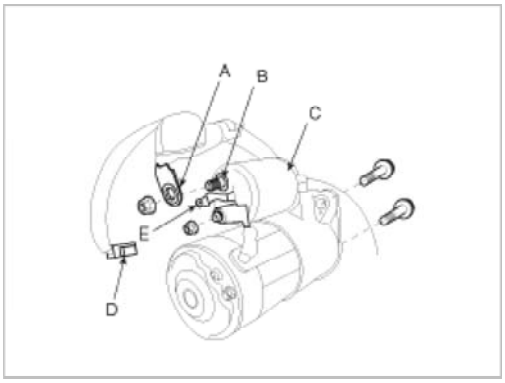

3. Remove the 2 bolts holding the starter, then remove the starter.

Tightening torque:
42.2 ~ 53.9N.m (4.3 ~ 5.5kgf.m, 31.1 ~ 39.8lb-ft)

4. Installation is the reverse of removal.
5. Connect the battery negative cable to the battery.

Disassembly

1. Disconnect the M-terminal (A) on the starter solenoid assembly (B).

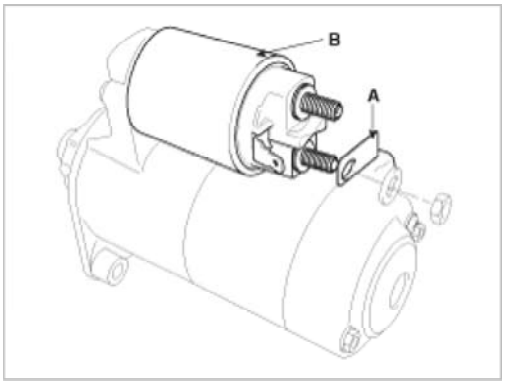

2. After loosening the 3 screws (A), detach the starter solenoid assembly (B).

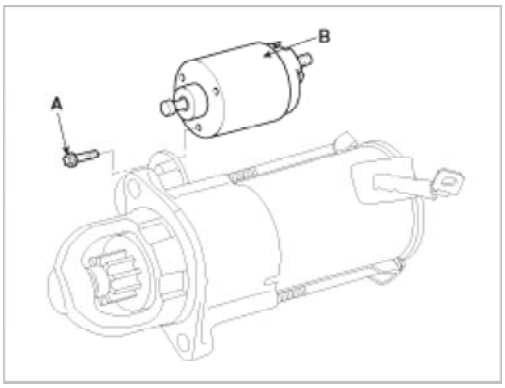

3. Loosen the through bolts (A).

mcx30.com

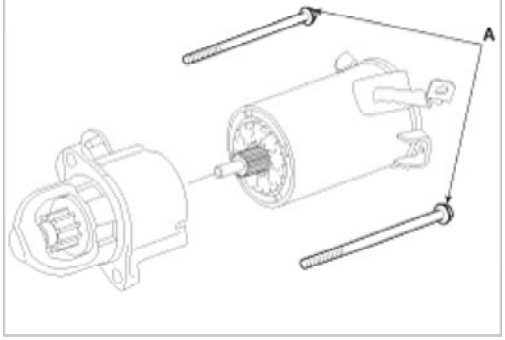

4. Remove the brush holder assembly (A), yoke (b) and armature (C).

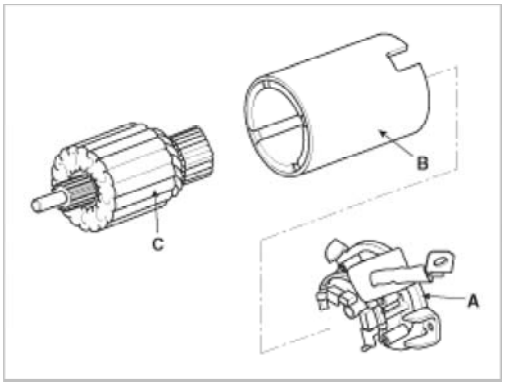

5. Remove the packing (A) and shield (B).

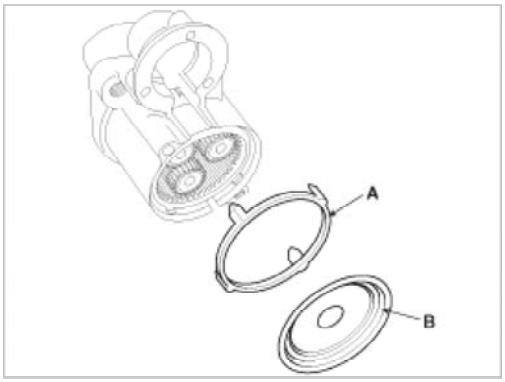

6. Remove the lever plate (A) and lever packing (B).

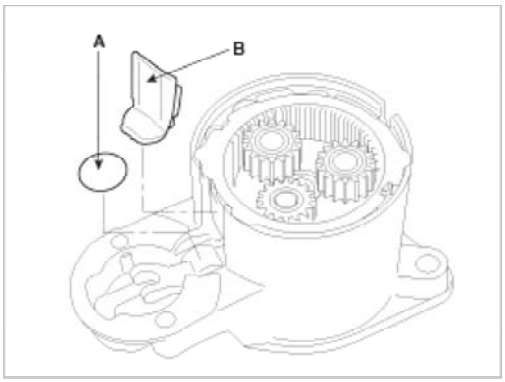

7. Disconnect the planet gear (A).

mcx30.com

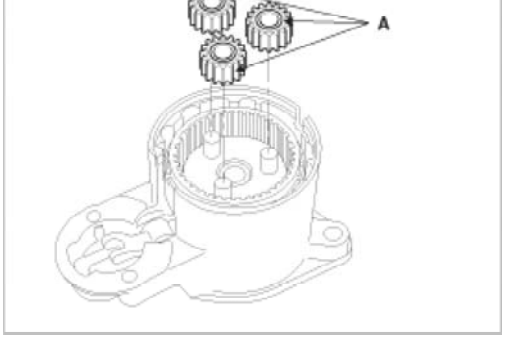

8. Disconnect the planet shaft assembly (A) and lever (B).

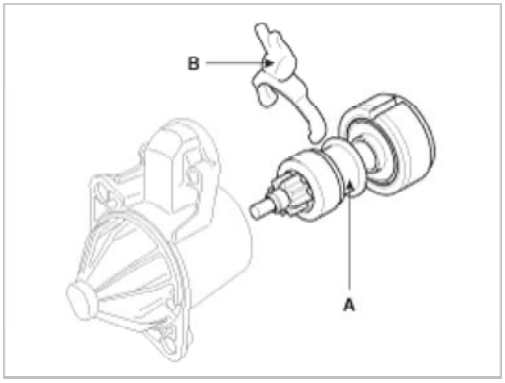

9. Press the stopper (A) using a socket (B).

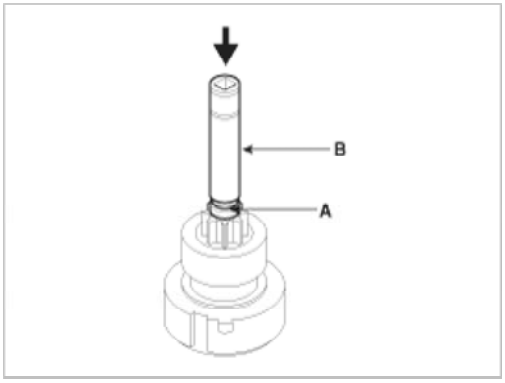

10. After removing the stop ring (A) using stop ring pliers (B).

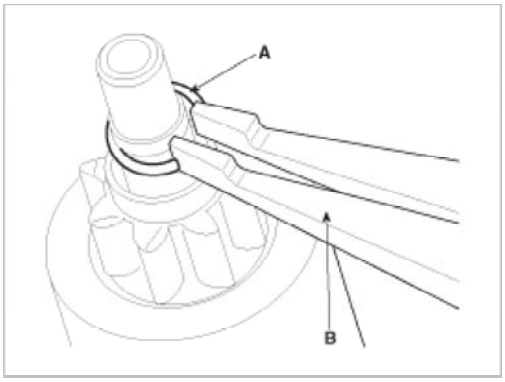

11. Disconnect the stop ring (A), overrunning clutch (B), internal gear (C) and planet shaft (D).

mcx30.com

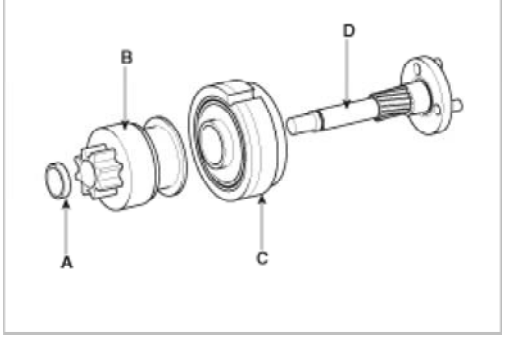

NOTE

Using a suitable pulling tool (A), pull the overrunning clutch stopper (C) over the stop ring (B).

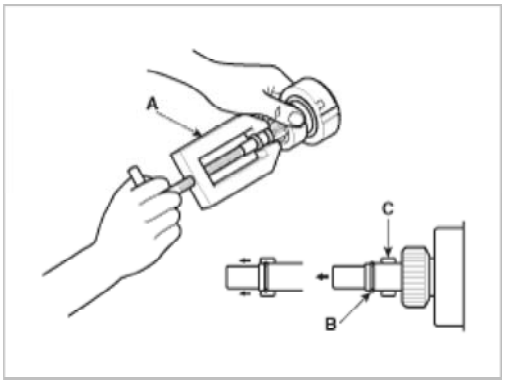

12. Reassembly is the reverse of disassembly.

Inspection

Armature Inspection And Test

1. Remove the starter.
2. Disassemble the starter as shown at the beginning of this procedure.
3. Inspect the armature for wear or damage from contact with the permanent magnet. If there is wear or damage, replace the armature.

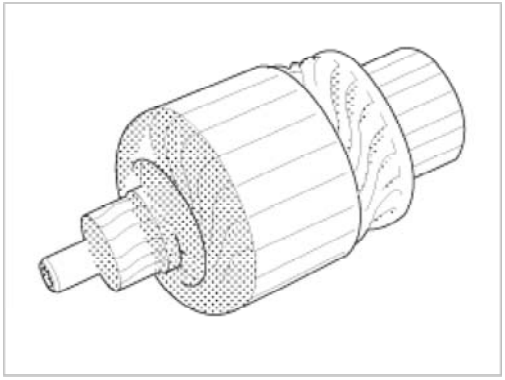

4. Check the commutator (A) surface. If the surface is dirty or burnt, resurface with emery cloth or a lathe within the following specifications, or recondition with #500 or #600 sandpaper (B).

mcx30.com

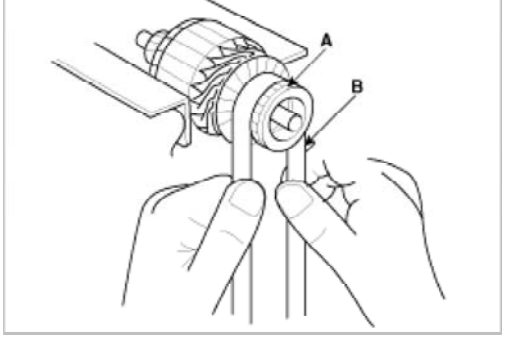

5. Measure the commutator (A) runout.
   A. If the commutator runout is within the service limit, check the commutator for carbon dust or brass chips between the segments.
   B. If the commutator run out is not within the service limit, replace the armature.

Commutator runout
Standard (New): 0.05mm (0.0019in.) max
Service limit: 0.08mm (0.0031in.)

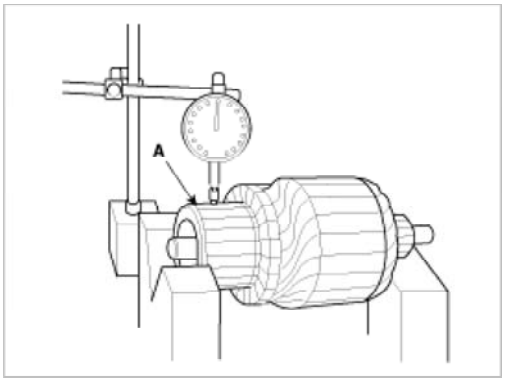

6. Check the mica depth (A). If the mica is too high (B), undercut the mica with a hacksaw blade to the proper depth. Cut away all the mica (C) between the commutator segments. The undercut should not be too shallow, too narrow, or v-shaped (D).

Commutator mica depth
Standard (New) : 0.8 mm (0.314 in.)
Limit : 0.2mm (0.0079 in.)

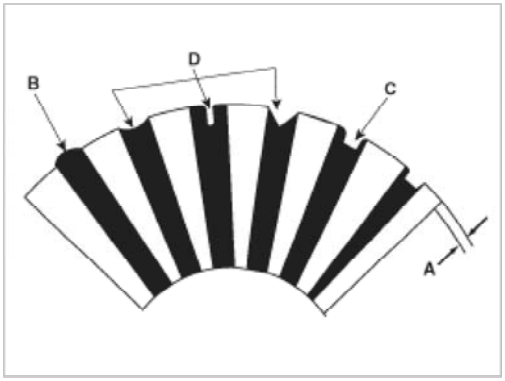

7. Check for continuity between the segments of the commutator. If an open circuit exists between any segments, replace the armature.

mcx30.com

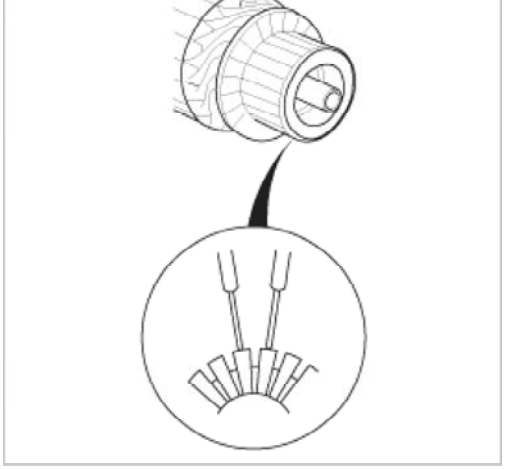

8. Check with an ohmmeter that no continuity exists between the commutator (A) and armature coil core (B), and between the commutator and armature shaft (C). If continuity exists, replace the armature.

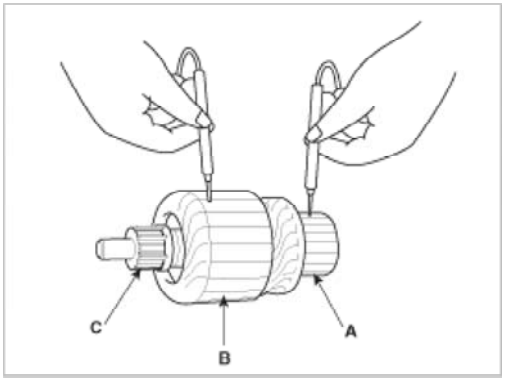

Inspect Starter Brush

Brushes that are worm out, or oil-soaked, should be replaced.

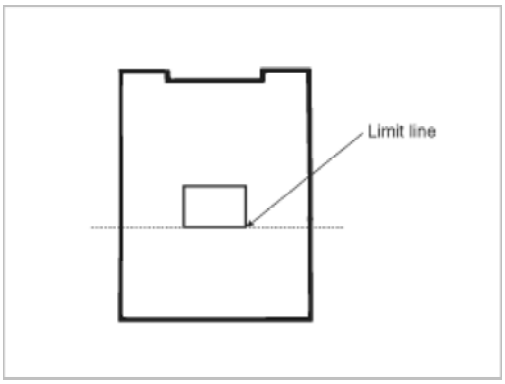

Starter Brush Holder Test

1. Check that there is no continuity between the (+) brush holder (A) and (-) plate (B). If there is continuity, replace the brush holder assembly.

mcx30.com

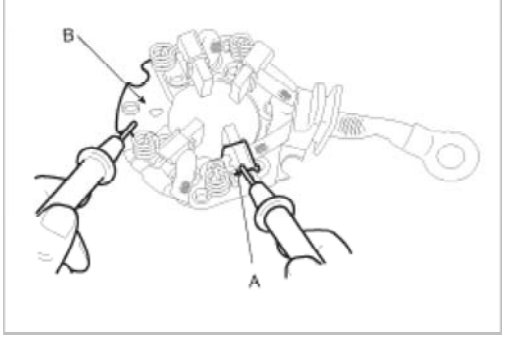

2. Pry back each brush spring (A) with a screwdriver, then position the brush (B) about halfway out of its holder, and release the spring to hold it there.

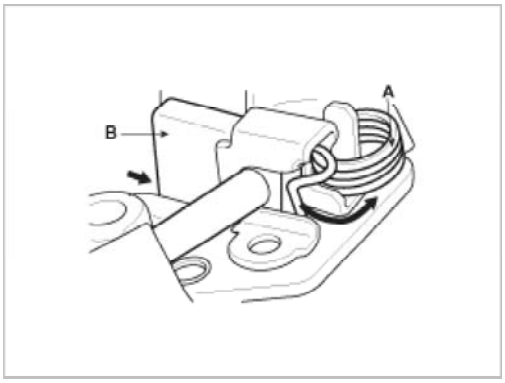

3. Install the armature in the housing, and install the brush holder. Next, pry back each brush spring again, and push the brush down until it seats against the commutator, then release the spring against the end of the brush.

> **NOTE**
>
> To seat new brushes, slip a strip of #500 or #600 sandpaper, with the grit side up, between the commutator and each brush, and smoothly rotate the armature. The contact surface of the brushes will be sanded to the same contour as the commutator.

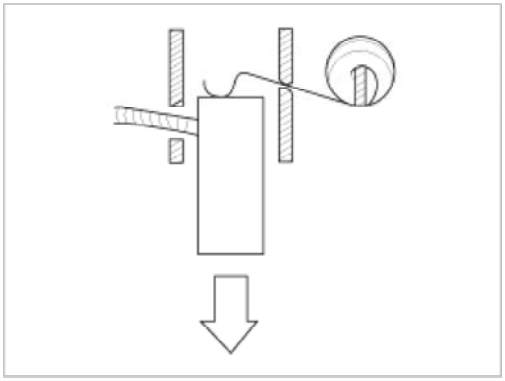

Inspect Overrunning Clutch

1. Slide the overrunning clutch along the shaft.
   Replace it if does not slide smoothly.
2. Rotate the overrunning clutch both ways.
   Does it lock in one direction and rotate smoothly in reverse? If it does not lock in either direction or it locks in both directions, replace it.

mcx30.com

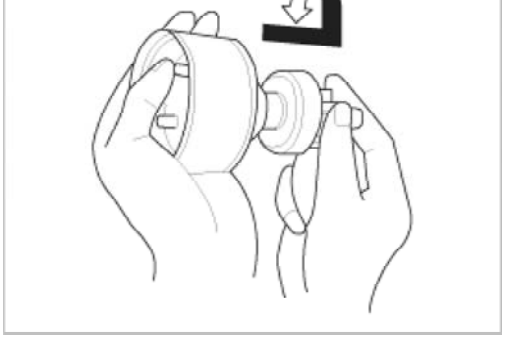

3. If the starter drive gear is worn or damaged, replace the overrunning clutch assembly. (the gear is not available separately).
   Check the condition of the flywheel or torque converter ring gear if the starter drive gear teeth are damaged.

Cleaning

1. Do not immerse parts in cleaning solvent. Immersing the yoke assembly and/or armature will damage the insulation. Wipe these parts with a cloth only.
2. Do not immerse the drive unit in cleaning solvent. The overrun clutch is pre-lubricated at the factory and solvent will wash lubrication from the clutch.
3. The drive unit may be cleaned with a brush moistened with cleaning solvent and wiped dry with a cloth.

Engine Electrical System > Starting System > Starter Relay > Repair procedures

Inspection

1. Remove the fuse box cover.
2. Remove the starter relay (A).

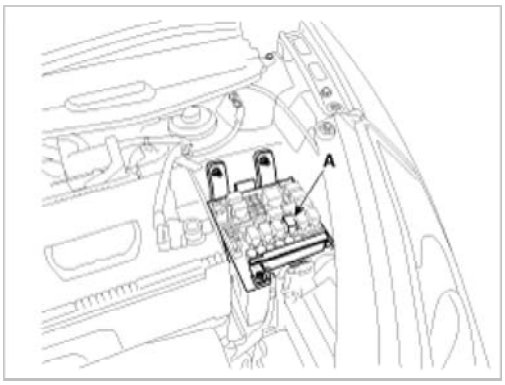

3. Using an ohmmeter, check that there is continuity between each terminal.

Terminal	Continuity
30 - 87	NO
85 - 86	YES

4. Apply 12V to terminal 85 and ground to terminal 86.
   Check for continuity between terminals 30 and 87.

mcx30.com

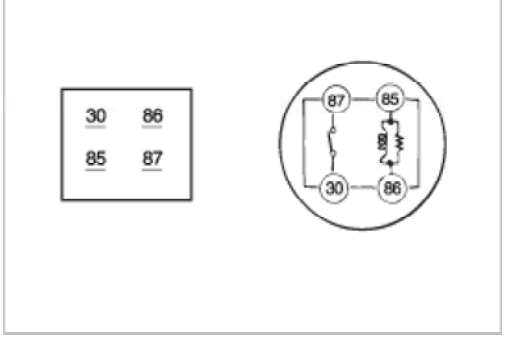

5. If there is no continuity, replace the starter relay.
6. Install the starter relay.
7. Install the fuse box cover.

Engine Electrical System > Cruise Control System > Schematic Diagrams

System Block Diagram

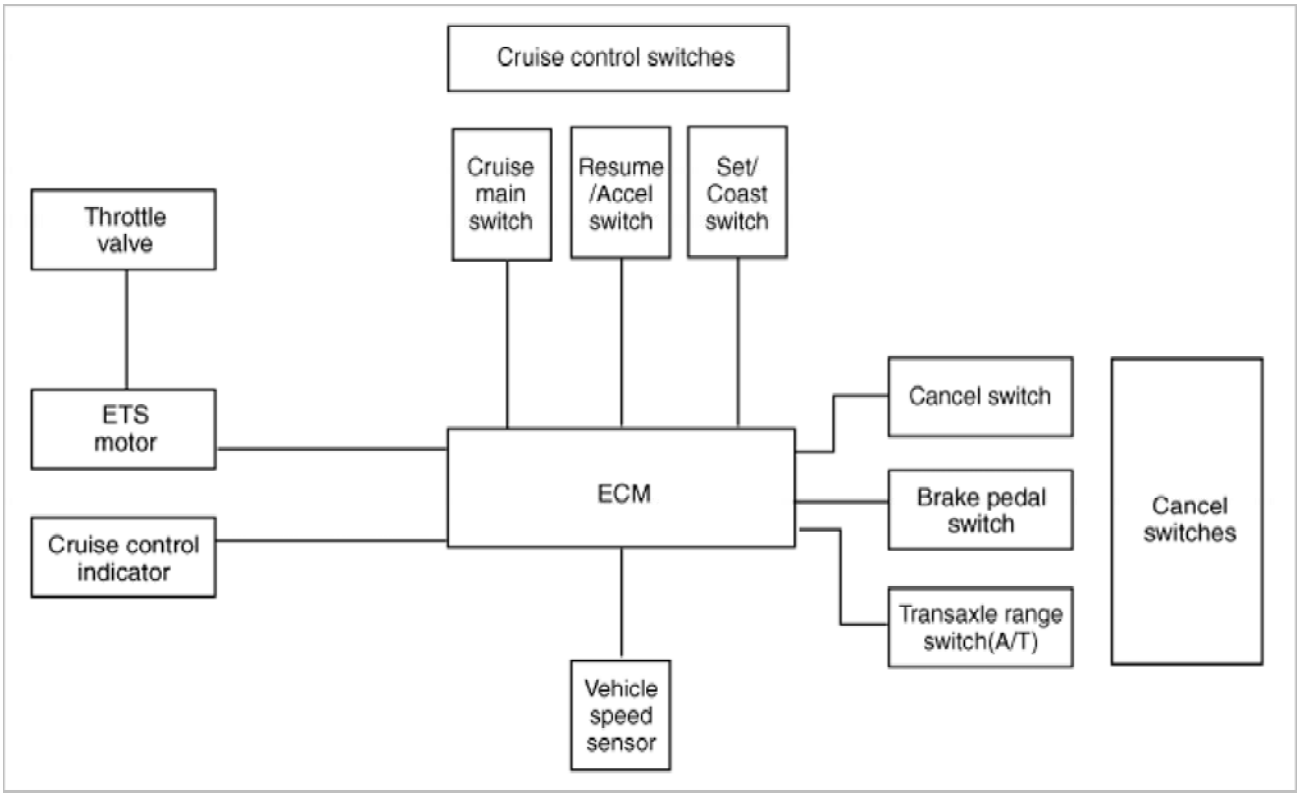

Component Parts And Function Outline

Component part		Function
Vehicle-speed sensor		Converts vehicle speed to pulse.
ECM		Receives signals from sensor and control switches.
Cruise control indicator		Illuminate when CRUISE main switch is ON (Built into cluster)
Cruise Control switches	ON/OFF switch	Switch for automatic speed control power supply.
	Resume/Accel switch	Controls automatic speed control functions by Resume/Accel switch (Set/Coast switch)
	Set/Coast switch	
Cancel switches	Cancel switch	Sends cancel signals to ECM.
	Brake-pedal switch	

mcx30.com

ETS motor		Regulates the throttle valve to the set opening by ECM.

* ETS : Electronic Throttle System

Engine Electrical System > Cruise Control System > Description and Operation

Cruise Control

The cruise control system is engaged by the cruise "ON/OFF" main switch located on right of steering wheel column. The system has the capability to cruise, coast, accelerate and resume speed.
It also has a safety interrupt, engaged upon depressing brake or shifting select lever.
The ECM is the control module for this system. The main components of cruise control system are mode control switches, transmission range switch, brake switch, vehicle speed sensor, ECM and ETS motor that connect throttle body.
The ECM contains a low speed limit which will prevent system engagement below a minimum speed of 40km/h (25mph).
The operation of the controller is controlled by mode control switches located on steering wheel.
Transmission range switch and brake switch are provided to disengage the cruise control system. The switches are on brake pedal bracket and transmission. When the brake pedal is depressed or select lever shifted, the cruise control system is electrically disengaged and the throttle is returned to the idle position.
Cruise main switch (ON/OFF)
The cruise control system is engaged by pressing the cruise "ON/OFF" main switch. Pressing the cruise "ON/OFF" main switch again releases throttle, clears cruise memory speed, and puts vehicle in a non-cruise mode.
Set/Coast switch (SET/–)
The "SET/–" switch located on right of steering wheel column has two functions.
The set function - Push the "SET/–" switch and release it at the desired speed. The SET indicator light in the instrument cluster will illuminate. Release the accelerator pedal. The desired speed will automatically be maintained.
The coast function - Push the "SET/–" switch and hold it when the cruise control is on. The vehicle will gradually slow down. Release the switch at the desired speed. The desired speed will be maintained.
Push the "SET/–" switch and release it quickly. The cruising speed will decrease by 2.0km/h (1.2mph).
Resume/Accel switch (RES/+)
The "RES/+" switch located on right of steering wheel column has two functions.
The resume function - If any method other than the cruise “ON/OFF” main switch was used to cancel cruising speed temporarily and the system is still activated, the most recent set speed will automatically resume when the "RES/+" switch is pushed. It will not resume, however, if the vehicle speed has dropped below approximately 40km/h (25mph).
The accel function - Push the "RES/+" switch and hold it when the cruise control is on. The vehicle will gradually accelerate. Release the switch at the desired speed. The desired speed will be maintained.
Push the "RES/+" switch and release it quickly. The cruising speed will increase by 2.0km/h (1.2mph).
Cancel switch (CANCEL)
The cruise control system is temporarily disengaged by pushing the "CANCEL" switch.
Cruise speed canceled by this switch can be recovered by pushing the "RES/+" switch.

Engine Electrical System > Cruise Control System > Troubleshooting

Trouble Symptom Charts

Trouble Symptom 1

mcx30.com

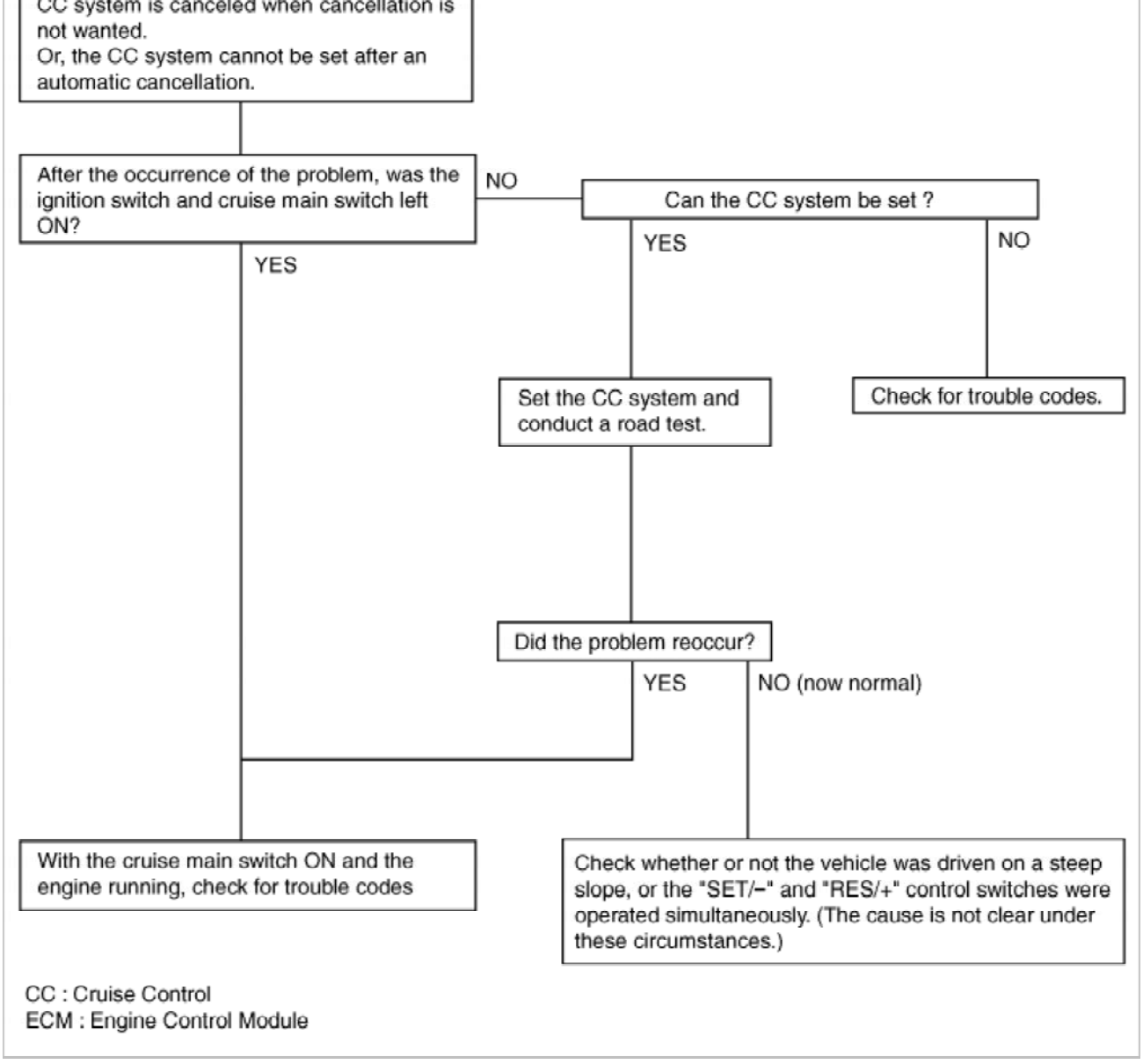

Trouble Symptom 2

Trouble symptom	Probable cause	Remedy
The set vehicle speed varies greatly upward or downward "Surging" (repeated alternating acceleration and deceleration) occurs after setting	Malfunction of the vehicle speed sensor circuit	Repair the vehicle speed sensor system, or replace the part
	Malfunction of ECM	Check input and output signals at ECM

Trouble Symptom 3

Trouble symptom	Probable cause	Remedy
The CC system is not canceled when the brake pedal is depressed	Damaged or disconnected wiring of the brake pedal switch	Repair the harness or replace the brake pedal switch
	Malfunction of the ECM signals	Check input and output signals at ECM

Trouble Symptom 4

Trouble symptom	Probable cause	Remedy
The CC system is not canceled when	Damaged or disconnected wiring of inhibitor switch input circuit	Repair the harness or repair or replace

mcx30.com

position (It is canceled, however, when the brake pedal is depressed)	Malfunction of the ECM signals	Check input and output signals at ECM

Trouble Symptom 5

Trouble symptom	Probable cause	Remedy
Cannot decelerate (coast) by using the "SET/–" switch	Temporary damaged or disconnected wiring of "SET/–" switch input circuit	Repair the harness or replace the "SET/–" switch
	Malfunction of the ECM signals	Check input and output signals at ECM

Trouble Symptom 6

Trouble symptom	Probable cause	Remedy
Cannot accelerate or resume speed by using the "RES/+" switch	Damaged or disconnected wiring, or short circuit, or "RES/+" switch input circuit	Repair the harness or replace the "RES/+" switch
	Malfunction of the ECM signals	Check input and output signals at ECM

Trouble Symptom 7

Trouble symptom	Probable cause	Remedy
CC system can be set while driving at a vehicle speed of less than 40km/h (25mph), or there is no automatic cancellation at that speed	Malfunction of the vehicle-speed sensor circuit	Repair the vehicle speed sensor system, or replace the part
	Malfunction of the ECM signals	Check input and output signals at ECM

Trouble Symptom 8

Trouble symptom	Probable cause	Remedy
The cruise main switch indicator lamp does not illuminate (But CC system is normal)	Damaged or disconnected bulb of cruise main switch indicator lamp	Repair the harness or replace the part.
	Harness damaged or disconnected	

Engine Electrical System > Cruise Control System > Cruise Control Switch > Schematic Diagrams

Circuit Diagram

mcx30.com

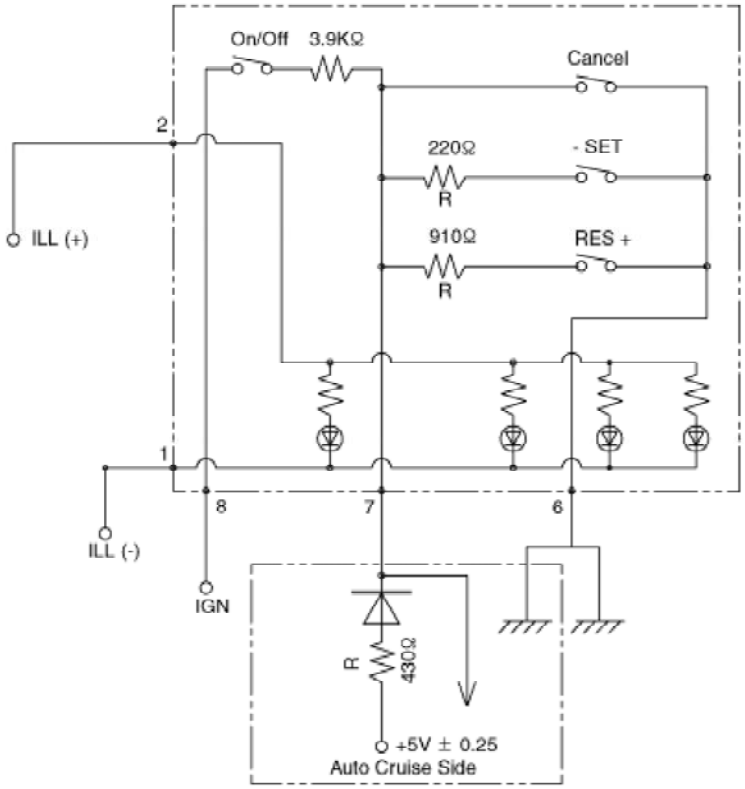

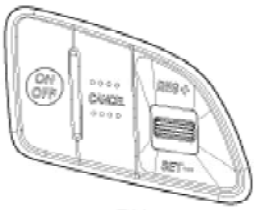

RH

NO	Connector
1	Illumination (-)
2	Illumination (+)
3	-
4	-
5	-
6	ACC (-)
7	ACC (+)
8	ACC On/Off

Engine Electrical System > Cruise Control System > Cruise Control Switch > Repair procedures

Removal and Installation

1. Disconnect the battery negative terminal.
2. Remove the driver airbag module. (Refer to the RT group - "Airbag module")
3. Remove the steering wheel. (Refer to the ST group - "Steering column and shaft")
4. Remove the steering wheel cover (A) after loosening the screws.

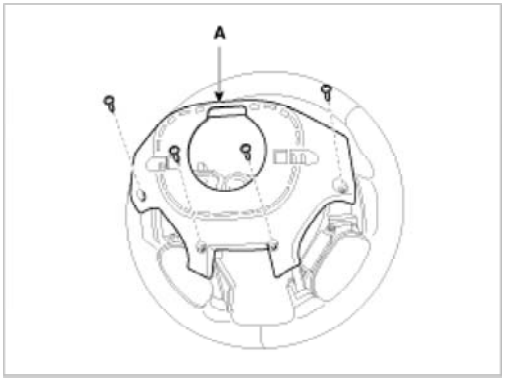

mcx30.com

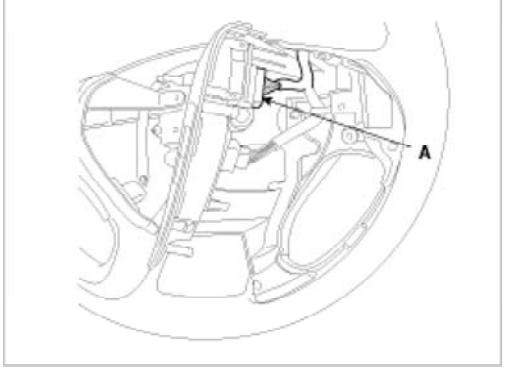

6. Remove the cruise control switch (A).

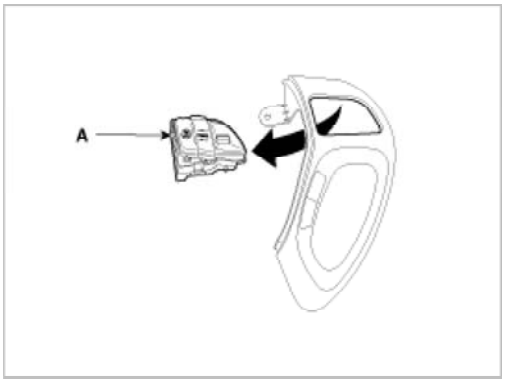

NOTE

Be careful not to damage the hook when removing the switch.

7. Installation is reverse order of removal.

Inspection

Measuring Resistance

1. Disconnect the cruise control switch connector from the control switch.

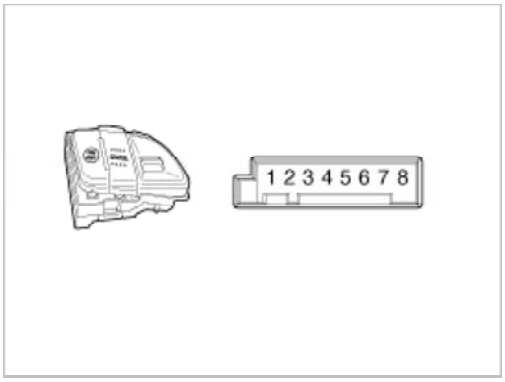

2. Measure resistance between terminals on the control switch when each function switch is ON (switch is depressed).

Function switch	Terminal	Resistance
CANCEL	6 - 7	0Ω ± 1%
SET/–	6 - 7	220Ω ± 1%
RES/+	6 - 7	910Ω ± 1%
ON/OFF	7 - 8	3900Ω ± 1%

3. If not within specification, replace switch.

mcx30.com

1. Connect the cruise control switch connector to the control switch.

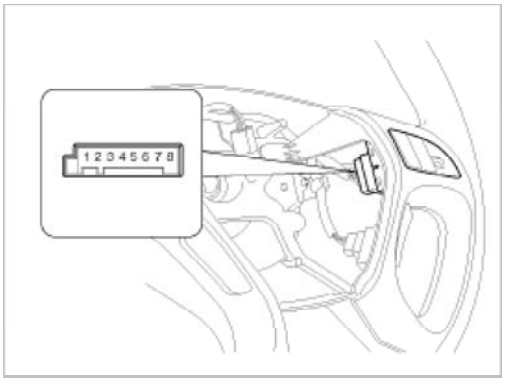

2. Measure voltage between terminals on the harness side connector when each function switch is ON (switch is depressed).

Function switch	Terminal	Voltage
CANCEL	6 - 7	0V ~ 0.22V
SET/–	6 - 7	1.28V ~ 1.77V
RES/+	6 - 7	2.78V ~ 3.22V
ON/OFF	-	-

3. If not within specification, replace switch.

mcx30.com